"A" Data Room

NRL/ATM
MISSION ENGINEERING DATA

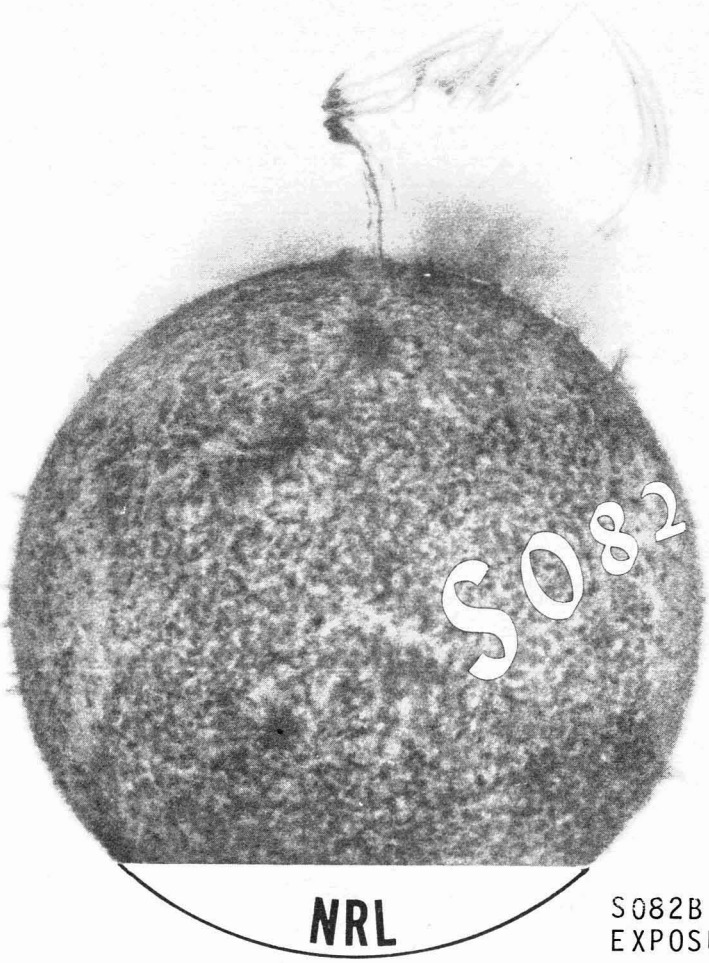

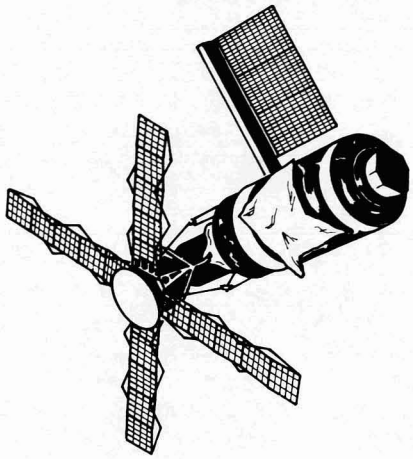

Volume III

S082B SPECTROGRAPH
EXPOSURES 1B-001-1 THROUGH 1B201-B

PREPARED FOR
UNITED STATES NAVAL RESEARCH LABORATORY
WASHINGTON, D.C.

BALL BROTHERS RESEARCH CORPORATION
SUBSIDIARY OF BALL CORPORATION
BOULDER, COLORADO

A HUGE ERUPTION FROM THE SURFACE OF THE SUN SEEN IN THE LIGHT OF HE II AT 304Å
9 AUGUST 1973

This photograph, obtained during the Skylab 3 Mission, reveals for the first time that helium erupting from the sun can stay together to altitudes up to 500,000 miles. After being ejected from the sun, the gas clouds seem to have come to a standstill, as though blocked by an unseen wall, and some material appears to have been directed back toward the sun as rain, distinguished by fine threads. At present it is a challenge to explain this mystery — what forces expelled these huge clouds, then blocked its further progress, yet allowed the cloud to maintain its threads. Both magnetic fields and gravity must play a part, but these curious forms seem to defy explanation based on magnetic and gravitational fields alone.

The instrument which produced this image was an extreme ultraviolet spectroheliograph, designed and constructed by the Naval Research Laboratory and the Ball Brothers Research Corporation under the direction of Dr. R. Tousey, the Principal Investigator for this NASA experiment. To the left may be seen the sun's image in emission from iron atoms which have lost 14 electrons by collision in the suns' million-degree coronal plasma gas.

VOLUME III

TEMPERATURE DATA - MSFC

NRL/ATM

MISSION ENGINEERING DATA

FOR

S082B SPECTROGRAPH

Contract No. N00014-67-C-0470

Contract Modification P00055

The temperature data was originated at MSFC from the telemetered data during the Skylab Missions. This data is a computer tabulation which has been corrected by coordination with other sources of information. All columns are entered below the respective measurement numbers and the time of each entry is recorded in the left hand column. An entry in each column is made at each SHUTTER OPEN and approximately each five (5) minutes during the time period the shutter remains open. Entries are not made more often than four (4) minute intervals, consequently not all "Shutter Open" will have associated temperature data. This data is provided in the form of a computer printout and is recorded on magnetic tape.

S082B TEMPERATURE

Column	Description
Time	Greenwich Mean Time of Entry
REAR (C090)	Absolute Temperature, Rear Center Base
CENT (C091)	Absolute Temperature, Center Base
FNT (C092)	Absolute Temperature, Front Center Base
REAR (C095)	Absolute Temperature, Rear Center, Right Side
CENT (C096)	Absolute Temperature, Center, Left Side
FNT (C197)	Absolute Temperature, Front Center, Left Side
GRATING (C200)	Absolute Temperature, Grating, Lower Edge
F. CENT (C201)	Differential Temperature, Front Center, Lid to Base
CENT (C202)	Differential Temperature, Center, Lid to Base
R. CENT (C203)	Differential Temperature, Rear Center, Lid to Base
F. CENT (C204)	Differential Temperature, Front Center, Side to Side
CENT (C205)	Differential Temperature, Center, Side to Side
R. CENT (C206)	Differential Temperature, Rear Center, Side to Side

See Figure III-1 for locations of measurements.

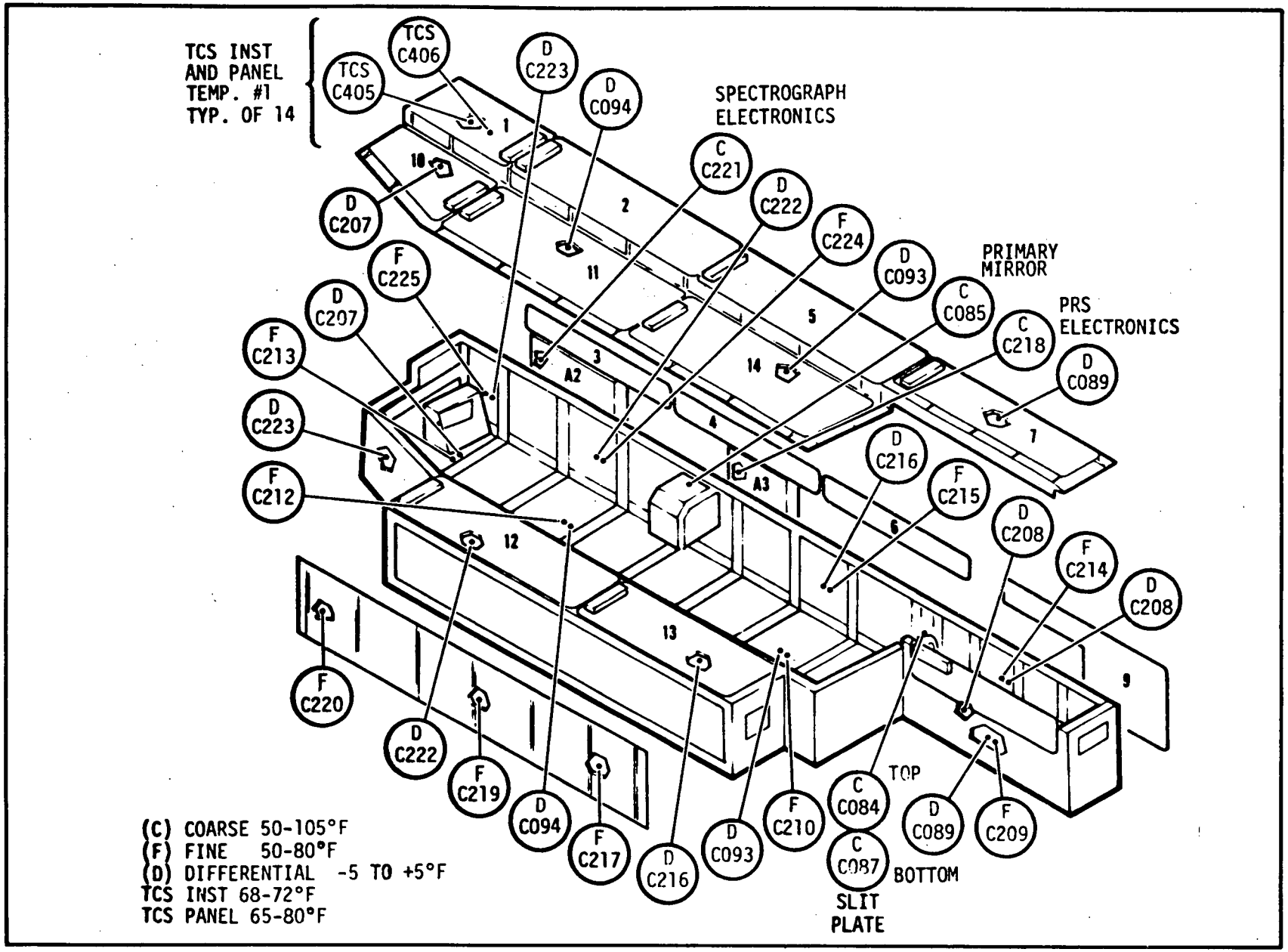

Figure 6-1 TCS and Instrument Temperature TM Points

TEMPERATURE DATA - MSFC

(Computer Run, Pages 170-185)

S082B-EDB
TEMPERATURE DATA 7- 8-75 AT 8 HOURS 2 MINS 59 SECS
PAGE 1- 1

ABSOLUTE TEMPERATURES
(67.5 TO 72.5)

FRAME	TIME	BASE FNT (C209)	BASE F CENT (C210)	BASE R CENT (C212)	BASE REAR (C213)	SIDE FNT (C214)	SIDE F CENT (C215)	SIDE R CENT (C224)	SIDE REAR (C225)	SLIT PLATE (68 TO 78 DEGF) TOP (C084)	SLIT PLATE (68 TO 78 DEGF) BOT (C087)	PRI MIR (68 TO 78 DEGF) (C085)
1B001-5	149:20: 3:47:837	68.94	69.47	69.45	68.30	69.16	69.50	69.78	68.58	76.01	76.25	70.68
1B001-7	149:20: 4:46: 93	68.82	69.47	69.38	68.30	69.16	69.50	69.81	68.51	75.83	75.93	70.80
1B002-1	150: 0: 8: 1:804	68.82	69.50	69.48	68.56	69.25	69.53	69.81	68.64	72.70	72.12	70.93
1B003-8	150: 0:32:16: 92	68.91	69.62	69.57	68.56	69.38	69.56	69.81	68.64	76.72	76.43	70.99
1B004-1	150: 2:10: 2: 70	69.10	70.00	39.70	68.59	69.53	69.87	69.94	68.64	76.96	76.75	71.24
1B005-1	150:14:45:47:653	68.85	69.59	69.48	68.49	69.38	69.62	69.78	68.58	76.66	76.75	70.93
1B005-8	150:14:51:13:711	68.94	69.68	69.48	68.49	69.44	69.62	69.78	68.58	76.54	76.37	70.93
1B006-1	150:15:36: 9:271	69.78	68.58	71.64	71.36	69.41	69.65	69.78	68.58	71.64	71.36	70.80
1B007-1	150:15:47:17:574	69.01	69.68	69.63	68.56	69.41	69.65	69.88	68.64	74.12	73.87	70.93
1B008-1	150:15:53:39: 41	69.01	69.75	69.48	68.56	69.41	69.65	69.88	68.64	74.83	74.62	70.93
1B009-2	150:17:11:56:408	69.01	69.75	69.48	68.56	69.41	69.65	69.88	68.64	74.83	74.62	70.93
1B010-1	150:17:29:42:776	69.13	69.97	69.88	68.68	69.50	69.93	70.04	68.76	76.60	76.37	71.18
1B011-1	150:17:51:40:712	69.25	70.06	69.82	68.71	69.56	69.96	70.13	68.82	77.19	77.18	71.18
1B011-3	150:19: 0:59:291	69.13	69.93	69.88	68.75	69.59	69.90	70.20	68.82	71.99	71.36	71.49
1B012-3	150:19:10:47:246	69.19	69.93	69.88	68.59	69.50	69.93	70.13	68.82	74.95	74.87	71.05
1B013-3	150:19:17:59:748	69.38	70.00	69.88	68.59	69.56	69.99	70.13	68.88	75.60	75.43	71.43
1B014-3	150:19:26:44: 25	69.25	69.97	69.92	68.68	69.56	70.02	70.04	68.88	76.07	75.75	71.30
1B017-1	150:19:30:51:288	69.28	70.06	69.88	68.75	69.62	69.99	70.13	68.88	75.24	75.37	71.05
1B019-2	151: 1:27: 1:700	68.88	69.62	69.57	68.49	69.38	69.62	69.88	68.54	76.60	76.62	70.80
1B020-2	151:16:38:10:677	68.85	69.56	69.73	68.75	69.38	69.62	70.01	68.79	72.70	72.12	71.05
1B021-2	151:16:42:25:913	68.88	69.62	69.76	68.81	69.32	69.62	69.91	68.82	73.06	72.62	71.18
1B021-8	151:16:43:35:417	68.82	69.56	69.76	68.81	69.38	69.62	69.94	68.88	72.76	72.62	70.93
1B022-8	151:16:47:50:983	68.88	69.59	69.76	68.81	69.38	69.62	69.94	68.88	73.17	72.87	70.93
1B023-2	151:16:50:56:408	68.85	69.62	69.73	68.84	69.38	69.75	70.01	68.88	73.41	72.99	71.12
1B024-2	151:16:55:11:628	68.94	69.68	69.76	68.81	69.38	69.75	69.97	68.67	73.71	73.12	71.24
1B024-6	151:16:56:21:416	68.97	69.68	69.73	68.81	69.44	69.81	70.01	68.79	73.53	73.18	70.99
1B025-1	151:17: 2:28:605	69.01	69.68	69.76	68.87	69.47	69.81	70.01	68.88	73.65	73.49	70.99
1B025-2	151:17:13:10:324	69.01	69.81	69.82	68.84	69.44	69.81	70.01	68.88	74.00	73.43	71.18
1B026-1	151:18: 2:50:120	69.10	69.87	69.95	69.00	69.53	69.99	70.04	68.95	71.17	70.61	71.18
1B026-1	151:18: 8:26:361	69.10	69.87	69.92	68.97	69.50	70.02	70.17	70.92	72.47	71.99	71.43
1B026-1	151:18:13:11: 87	69.10	69.93	69.95	69.06	69.50	70.12	70.04	68.98	73.06	72.37	71.55
1B026-8	151:18:18:26:555	69.07	69.93	69.95	69.06	69.44	69.99	70.04	69.01	73.41	72.93	71.43
1B027-1	151:18:23:26:566	69.07	69.93	69.95	68.93	69.50	69.99	70.20	69.01	73.71	73.24	71.43
1B027-1	151:18:28:26:586	69.07	69.93	69.98	68.97	69.50	69.93	70.20	69.01	73.29	72.99	70.93
1B027-7	151:18:33:26:621	69.19	70.03	69.95	69.06	69.56	69.90	70.20	69.01	74.00	73.49	71.43
1B028-7	151:19:54:24:713	69.22	70.12	70.14	69.06	69.56	70.15	70.29	69.13	75.42	75.12	71.68
1B029-7	151:20: 2:39:102	69.25	70.18	70.14	69.06	69.62	70.15	70.26	69.07	75.54	75.37	71.68
1B030-7	151:21: 7: 0:840	69.32	70.18	70.14	69.00	69.81	70.12	70.29	69.01	71.17	70.74	71.43

S082B-ED8
TEMPERATURE DATA - CONTINUED
PAGE 2- 1 7- 8-75 AT 8 HOURS 2 MINS 59 SECS

---------- DIFFERENCE TEMPERATURES ----------

		LID-BASE (-1.3 DEGF TO 1.3 DEGF)				SIDE-SIDE (-2.5 DEGF TO 2.5 DEGF)				XUV MON (67.5 DEGF TO 72.5 DEGF)		
FRAME	TIME	FNT (C089)	F CENT (C093)	R CENT (C094)	REAR (C207)	FNT (C208)	F CENT (C216)	R CENT (C222)	REAR (C223)	FNT (C217)	CENT (C219)	REAR (C220)
1B001-5	149:20: 3:47:837	.53	.45	.49	1.01	-.01	-.73	-.42	-.41	70.61	70.06	69.28
1B001-7	149:20: 4:46: 93	.53	.45	.51	.99	-.01	-.71	-.40	-.44	70.55	70.03	69.28
1B002-1	150: 0: 8: 1:804	.57	.51	.45	.96	-.03	-.90	-.48	-.50	70.92	70.18	69.43
1B003-8	150: 0:32:16: 92	.51	.42	.46	.95	-.08	-1.10	-.44	-.49	71.29	70.18	69.40
1B004-1	150: 2:10: 2: 70	.42	.18	.37	.91	-.05	-1.03	-.40	-.48	71.53	70.22	69.43
1B005-1	150:14:45:47:653	.53	.43	.49	.95	-.03	-1.10	-.48	-.52	71.29	70.12	69.37
1B005-8	150:14:51:13:711	.21	.37	.51	.80	-.03	-1.14	-.46	-.52	71.35	70.18	69.28
1B006-1	150:15:36: 9:271	.50	.35	.43	.93	-.07	-1.02	-.45	-.48	71.13	70.18	69.43
1B007-1	150:15:47:17:574	.48	.34	.45	.93	-.05	-1.06	-.45	-.49	71.29	70.18	69.37
1B008-1	150:15:53:39: 41	.45	.34	.43	.95	-.07	-1.08	-.45	-.48	71.35	70.18	69.37
1B009-2	150:17:11:56:408	.42	.18	.30	.84	-.05	-1.00	-.37	-.57	71.29	70.37	69.46
1B010-1	150:17:29:42:776	.39	.16	.28	.83	-.07	-1.02	-.34	-.54	71.47	70.22	69.50
1B011-1	150:17:51:40:712	.28	.10	.26	.82	-.07	-1.04	-.32	-.48	71.63	70.31	69.50
1B011-3	150:19: 0:59:291	.37	.14	.26	.83	-.05	-.94	-.32	-.41	71.29	70.37	69.50
1B012-3	150:19:10:47:246	.39	.14	.26	.83	-.08	-1.03	.35	-.40	71.38	70.22	69.50
1B013-3	150:19:17:59:748	.39	.17	.26	.82	-.08	-.96	-.32	-.42	71.47	70.28	69.62
1B014-3	150:19:26:44: 25	.34	.12	.24	.82	-.08	-.98	-.32	-.40	71.47	70.31	69.50
1B017-1	150:19:30:51:288	.33	.12	.26	.83	-.08	-1.04	-.29	-.40	71.60	70.43	69.56
1B019-2	151: 1:27: 1:700	.54	.40	.47	.93	-.01	-1.06	-.46	-.50	71.35	70.18	69.28
1B020-2	151:16:38:10:677	.53	.42	.37	.84	-.03	-1.04	-.44	-.54	71.10	70.15	69.62
1B021-2	151:16:42:25:913	.51	.39	.35	.78	-.08	-1.08	-.46	-.56	71.13	70.22	69.62
1B021-8	151:16:43:35:417	.51	.42	.35	.82	-.07	-1.11	-.44	-.56	71.13	70.18	69.62
1B022-8	151:16:47:50:983	.49	.35	.35	.82	-.04	-1.07	-.44	-.57	71.29	70.18	69.62
1B023-2	151:16:50:56:408	.47	.41	.35	.80	-.09	-1.02	-.41	-.60	71.35	70.18	69.53
1B024-2	151:16:55:11:628	.46	.37	.35	.80	-.13	-1.03	-.40	-.66	71.29	70.22	69.62
1B024-6	151:16:56:21:416	.45	.35	.38	.80	-.07	-1.06	-.40	-.69	71.35	70.18	69.68
1B025-1	151:17: 2:28:605	.43	.30	.35	.80	-.13	-1.06	-.38	-.75	71.53	70.18	69.74
1B025-2	151:17:13:10:324	.42	.26	.33	.79	-.11	-1.07	-.38	-.82	71.38	70.22	69.62
1B026-1	151:18: 2:50:120	.42	.18	.18	.70	-.05	-.84	-.33	-.71	71.29	70.31	69.68
1B026-1	151:18: 8:26:361	.39	.18	.18	.72	-.08	-.90	-.36	-.74	71.35	70.37	69.74
1B026-1	151:18:13:11: 87	.39	.16	.20	.70	-.07	-.90	-.32	-.74	71.41	70.37	69.68
1B026-8	151:18:18:26:555	.39	.14	.20	.71	-.07	-.98	-.34	-.81	71.41	70.34	69.74
1B027-1	151:18:23:26:566	.42	.16	.20	.70	-.08	-.99	-.32	-.83	71.47	70.31	69.74
1B027-1	151:18:28:26:586	.37	.16	.21	.68	-.07	-1.00	-.32	-.85	71.50	70.31	69.74
1B027-7	151:18:33:26:621	.37	.14	.20	.68	-.07	-.99	-.27	-.89	71.60	70.22	69.74
1B028-7	151:19:54:24:713	.34	-.03	.08	.62	-.07	-.96	-.23	-.73	71.50	70.43	69.78
1B029-7	151:20: 2:39:102	.34	-.04	.04	.64	-.07	-.96	-.23	-.66	71.63	70.43	69.78
1B030-7	151:21: 7: 0:840	.30	-.04	.10	.68	-.05	-.90	-.24	-.54	71.47	70.43	69.74

S082B-EDB
TEMPERATURE DATA 7- 8-75 AT 8 HOURS 2 MINS 59 SECS
PAGE 1- 2

ABSOLUTE TEMPERATURES
(67.5 TO 72.5)

FRAME	TIME	BASE FNT (C209)	BASE F CENT (C210)	BASE R CENT (C212)	BASE REAR (C213)	SIDE FNT (C214)	SIDE F CENT (C215)	SIDE R CENT (C224)	SIDE REAR (C225)	SLIT PLATE (68 TO 78 DEGF) TOP (C084)	SLIT PLATE (68 TO 78 DEGF) BOT (C087)	PRI MIR (68 TO 78 DEGF) (C085)
1B031-7	151:21:26:24:281	69.22	70.18	70.14	69.00	69.65	70.15	70.29	69.07	74.65	74.37	71.55
1B032-7	152: 0:30:25:730	69.01	69.72	69.76	68.81	69.56	69.81	69.91	68.88	76.07	75.87	71.18
1B033-6	152: 0:34:27:718	69.01	69.72	69.76	68.81	69.56	69.81	69.91	68.88	76.07	75.87	71.18
1B033-8	152: 0:37:16:217	69.07	69.72	69.76	68.81	69.53	69.75	69.97	68.95	76.48	76.68	70.93
1B034-1	152: 0:44:26:322	69.07	69.72	69.76	68.81	69.53	69.75	69.97	68.95	76.48	76.68	70.93
1B035-1	153:14:18:21:552	69.07	69.68	69.70	68.81	69.38	69.62	69.88	68.82	76.36	76.37	70.80
1B035-3	153:15:32: 1:106	69.01	69.68	69.70	68.75	69.41	69.65	70.01	68.88	74.95	74.62	70.93
1B036-3	153:15:40:32: 79	69.01	69.72	69.76	68.81	69.56	69.81	69.91	68.88	76.07	75.87	71.18
1B037-3	153:15:51: 7:297	69.07	69.72	69.76	68.81	69.53	69.75	69.97	68.95	76.48	76.68	70.93
1B038-3	153:17:20:32:806	69.10	70.06	69.95	68.93	69.62	70.05	70.20	68.91	77.90	77.62	71.37
1B039-3	153:21:49:41:307	68.94	69.62	69.82	68.84	69.41	69.65	70.01	68.88	75.54	75.43	70.93
1B040-3	153:23: 8:41:213	69.07	69.87	69.82	68.78	69.50	69.81	70.01	68.88	75.60	75.37	70.99
1B041-3	154: 0:43:30:159	69.25	70.00	69.88	68.81	69.56	70.12	70.13	68.88	76.54	76.37	71.30
1B042-3	154: 1: 4: 0: 17	69.25	70.06	69.79	68.87	69.62	69.99	70.20	68.95	76.96	76.75	71.43
1B043-3	154:16: 2:27:511	69.01	69.72	69.76	68.75	69.41	69.75	70.01	68.82	72.76	72.24	71.18
1B044-3	154:16:27: 5:938	68.97	69.81	69.73	68.75	69.62	69.90	70.01	68.82	75.54	75.43	70.93
1B045-3	154:16:41:15:320	69.10	69.93	69.82	68.81	69.50	69.87	70.01	68.91	76.01	75.93	71.24
1B046-3	154:17:56:44:189	69.13	70.00	69.76	68.75	69.44	69.75	70.13	68.88	70.10	69.61	71.05
1B047-3	154:18:14:30:886	69.25	70.00	69.88	68.81	69.56	70.12	70.13	68.88	76.54	76.37	71.30
1B048-3	154:20:46:43:697	69.25	70.00	69.88	68.81	69.56	70.12	70.13	68.88	76.54	76.37	71.30
1B048-6	154:20:55:55:168	69.25	70.06	69.79	68.87	69.62	69.99	70.20	68.95	76.96	76.75	71.43
1B048-7	154:22:35:19:410	69.25	70.06	69.79	68.87	69.62	69.99	70.20	68.95	76.96	76.75	71.43
1B049-7	154:22:43:31:934	69.32	70.18	69.95	68.87	69.62	69.93	70.20	68.88	70.69	70.36	71.12
1B050-7	154:22:53:43:603	69.32	70.18	69.95	68.87	69.62	69.93	70.20	68.88	70.69	70.36	71.18
1B051-7	155: 1:48:26:738	69.07	69.93	69.82	68.81	69.50	69.87	70.04	68.88	77.19	76.93	71.30
1B052-7	155:15:55:36:501	68.82	69.56	69.57	68.68	69.32	69.62	69.78	68.76	76.84	76.87	70.68
1B053-7	155:18:32:43:556	68.82	69.47	69.70	68.75	69.35	69.62	69.94	68.76	74.47	74.37	70.80
1B055-2	155:18:59:22:225	69.01	69.68	69.73	68.75	69.44	69.87	69.88	68.79	77.19	77.00	70.93
1B055-7	155:19:58:46:201	69.07	69.84	69.76	68.75	69.50	69.81	70.01	68.88	72.76	72.74	70.93
1B056-7	155:20: 8:38:419	69.07	69.81	69.82	68.75	69.50	69.75	69.97	68.82	75.89	75.62	71.24
1B058-6	155:21:48:32:507	69.10	69.97	69.85	68.81	69.50	69.93	70.07	68.82	76.54	76.43	71.05
1B058-7	155:21:53:32:760	69.10	69.97	69.73	68.81	69.50	69.93	70.07	68.88	77.01	76.93	71.05
1B059-7	156: 0:46:30:259	69.01	69.68	69.82	68.81	69.44	69.75	69.94	68.82	74.83	74.43	71.30
1B059-8	156: 1: 3:21:957	69.07	69.84	69.82	68.81	69.41	69.81	70.01	68.88	75.12	74.93	71.18
1B060-8	156: 1: 8:43:440	69.07	69.84	69.82	68.84	69.50	69.87	70.01	68.88	75.54	75.37	70.93
1B061-8	156: 2:40:40:948	69.19	70.00	69.88	68.81	69.56	69.90	70.13	68.88	77.19	77.25	70.93
1B062-2	156:16:24:54:389	69.01	69.72	69.73	68.81	69.44	69.75	70.01	68.88	75.18	75.24	70.93
1B063-2	156:16:37:20:353	69.07	69.81	69.79	68.87	69.38	69.65	70.01	68.88	76.13	75.75	71.18

S082B-EDB
TEMPERATURE DATA - CONTINUED
PAGE 2- 2 7- 8-75 AT 8 HOURS 2 MINS 59 SECS

---------- DIFFERENCE TEMPERATURES ----------

		LID-BASE (-1.3 DEGF TO 1.3 DEGF)				SIDE-SIDE (-2.5 DEGF TO 2.5 DEGF)				XUV MON (67.5 DEGF TO 72.5 DEGF)		
FRAME	TIME	FNT (C089)	F CENT (C093)	R CENT (C094)	REAR (C207)	FNT (C208)	F CENT (C216)	R CENT (C222)	REAR (C223)	FNT (C217)	CENT (C219)	REAR (C220)
1B031-7	151:21:26:24:281	.29	-.02	.12	.68	-.11	-1.00	-.25	-.54	71.63	70.43	69.74
1B032-7	152: 0:30:25:730	.49	.28	.34	.79	-.08	-1.07	-.41	-.56	71.41	70.22	69.65
1B033-6	152: 0:34:27:718	.49	.28	.34	.79	-.08	-1.07	-.41	-.56	71.41	70.22	69.65
1B033-8	152: 0:37:16:217	.43	.24	.34	.76	-.11	-1.12	-.41	-.69	71.50	70.22	69.59
1B034-1	152: 0:44:26:322	.43	.24	.34	.76	-.11	-1.12	-.41	-.69	71.50	70.22	69.59
1B035-1	153:14:18:21:552	.51	.34	.43	.84	-.03	-1.14	-.46	-.48	71.38	70.18	69.53
1B035-3	153:15:32: 1:106	.50	.34	.36	.83	-.05	-1.02	-.46	-.52	71.23	70.18	69.62
1B036-3	153:15:40:32: 79	.49	.28	.34	.79	-.08	-1.07	-.41	-.56	71.41	70.22	69.65
1B037-3	153:15:51: 7:297	.43	.24	.34	.76	-.11	-1.12	-.41	-.69	71.50	70.22	69.59
1B038-3	153:17:20:32:806	.41	.06	.25	.75	-.04	-1.06	-.34	-.56	71.63	70.37	69.68
1B039-3	153:21:49:41:307	.53	.37	.36	.82	-.05	-1.02	-.41	-.50	71.35	70.22	69.62
1B040-3	153:23: 8:41:213	.43	.25	.34	.80	-.07	-1.02	-.39	-.46	71.35	70.31	69.62
1B041-3	154: 0:43:30:159	.41	.16	.26	.78	-.04	-1.04	-.38	-.48	71.53	70.31	69.68
1B042-3	154: 1: 4: 0: 17	.30	.04	.26	.76	-.09	-1.10	-.36	-.69	71.63	70.43	69.53
1B043-3	154:16: 2:27:511	.54	.28	.37	.84	-.03	-1.04	-.44	-.56	71.23	70.22	69.56
1B044-3	154:16:27: 5:938	.47	.26	.35	.84	-.09	-1.10	-.40	-.49	71.47	70.22	69.56
1B045-3	154:16:41:15:320	.45	.20	.33	.82	-.07	-1.16	-.40	-.48	71.53	70.31	69.53
1B046-3	154:17:56:44:189	.38	.12	.26	.78	-.07	-1.01	-.38	-.44	71.23	70.28	69.53
1B047-3	154:18:14:30:886	.41	.16	.26	.78	-.04	-1.04	-.38	-.48	71.53	70.31	69.68
1B048-3	154:20:46:43:697	.41	.16	.26	.78	-.04	-1.04	-.38	-.48	71.53	70.31	69.68
1B048-6	154:20:55:55:168	.30	.04	.26	.76	-.09	-1.10	-.36	-.69	71.63	70.43	69.53
1B048-7	154:22:35:19:410	.30	.04	.26	.76	-.09	-1.10	-.36	-.69	71.63	70.43	69.53
1B049-7	154:22:43:31:634	.30	-.03	.18	.71	-.05	-1.00	-.29	-.79	71.41	70.43	69.78
1B050-7	154:22:53:43:603	.30	-.03	.18	.71	-.05	-1.00	-.29	-.79	71.41	70.43	69.78
1B051-7	155: 1:48:26:738	.43	.20	.30	.78	-.05	-1.09	-.40	-.49	71.60	70.31	69.62
1B052-7	155:15:55:36:501	.55	.43	.45	.86	-.03	-1.10	-.48	-.52	71.35	70.12	69.62
1B053-7	155:18:32:43:556	.57	.47	.42	.84	-.01	-.99	-.46	-.50	71.10	70.22	69.56
1B055-2	155:18:59:22:225	.51	.35	.39	.84	-.05	-1.06	-.44	-.50	71.38	70.18	69.50
1B055-7	155:19:58:46:201	.43	.25	.35	.84	-.05	-1.02	-.41	-.46	71.23	70.22	69.62
1B058-6	155:21:48:32:507	.42	.18	.29	.80	-.07	-1.02	-.40	-.46	71.47	70.31	69.62
1B058-7	155:21:53:32:760	.39	.16	.30	.80	-.07	-1.02	-.37	-.44	71.41	70.37	69.62
1B059-7	156: 0:46:30:259	.46	.30	.34	.80	-.05	-.95	-.40	-.48	71.29	70.22	69.59
1B059-8	156: 1: 3:21:957	.45	.26	.35	.78	-.07	-1.07	-.40	-.48	71.38	70.22	69.62
1B060-8	156: 1: 8:43:440	.45	.25	.36	.78	-.07	-1.10	-.39	-.48	71.47	70.22	69.62
1B061-8	156: 2:40:40:948	.39	.14	.29	.78	-.07	-1.14	-.38	-.45	71.53	70.34	69.62
1B062-2	156:16:24:54:389	.51	.30	.35	.82	-.05	-1.02	-.42	-.54	71.26	70.25	69.62
1B063-2	156:16:37:20:353	.45	.26	.38	.84	-.09	-1.07	-.38	-.54	71.47	70.37	69.68

S082B-EDB
TEMPERATURE DATA 7- 8-75 AT 8 HOURS 2 MINS 59 SECS
PAGE 1- 3

ABSOLUTE TEMPERATURES
(67.5 TO 72.5)

FRAME	TIME	BASE FNT (C209)	BASE F CENT (C210)	BASE R CENT (C212)	BASE REAR (C213)	SIDE FNT (C214)	SIDE F CENT (C215)	SIDE R CENT (C224)	SIDE REAR (C225)	SLIT PLATE (68 TO 78 DEGF) TOP (C084)	SLIT PLATE (68 TO 78 DEGF) BOT (C087)	PRI MIR (68 TO 78 DEGF) (C085)
1B064-2	156:20:49:41:885	68.82	69.56	69.63	68.62	69.19	69.44	69.84	68.88	71.58	71.11	70.93
1B065-2	156:20:53:57:123	68.85	69.56	69.63	68.59	69.16	69.44	70.07	68.88	72.23	71.87	70.80
1B066-8	156:20:59:22:605	68.88	69.53	69.48	68.59	69.25	69.50	69.94	68.82	72.70	72.43	70.80
1B067-2	156:21: 2:20:622	68.91	69.59	69.70	68.81	69.38	69.62	69.91	68.91	73.17	72.74	71.30
1B068-2	156:21: 6:43:102	68.94	69.56	69.73	68.81	69.38	69.62	69.91	68.82	73.23	73.05	70.80
1B068-6	156:21: 7:52:858	68.94	69.56	69.73	68.75	69.38	69.81	70.01	68.82	73.17	73.12	70.86
1B069-1	156:21:14: 0: 83	69.01	69.62	69.82	68.81	69.38	69.65	70.01	68.82	73.53	73.24	70.93
1B069-2	156:21:24:42: 15	68.97	69.59	69.73	68.84	69.50	69.68	70.01	68.82	73.65	73.37	70.93
1B069-8	156:21:29:15:251	69.07	69.68	69.76	68.84	69.44	69.75	70.01	68.88	73.88	73.49	70.93
1B070-1	156:21:31:58:752	69.07	69.68	69.76	68.87	69.44	69.75	70.01	68.88	73.71	73.62	70.99
1B070-2	156:22:19:50:338	69.07	69.81	69.98	68.93	69.47	69.81	70.13	68.95	70.52	69.86	71.30
1B070-8	156:22:24:23: 83	69.07	69.87	69.95	69.00	69.50	69.90	70.07	68.95	71.34	70.93	71.05
1B071-1	156:22:27: 6:591	69.13	69.87	69.98	68.97	69.50	69.90	70.13	68.95	71.82	71.43	71.43
1B071-2	156:22:37:48:820	69.10	69.87	69.95	69.00	69.53	69.87	70.20	68.95	73.29	72.87	71.30
1B071-8	156:22:42:22: 83	69.10	69.93	70.01	69.00	69.50	69.93	70.17	68.95	73.65	73.12	71.43
1B072-1	156:22:45: 5:840	69.10	69.90	69.95	69.09	69.50	69.93	70.20	69.01	73.71	73.37	71.43
1B072-2	156:22:55:47:506	69.10	69.97	69.98	69.00	69.50	69.99	70.20	68.91	74.18	73.43	71.18
1B072-4	156:22:56:22:497	69.10	68.94	69.98	69.00	69.53	69.99	70.26	68.91	74.18	73.43	71.18
1B073-2	157:20: 8:16:510	68.85	69.25	69.45	68.56	69.13	69.25	71.84	68.67	70.58	70.05	71.68
1B074-1	157:20:12: 9:249	68.70	69.31	69.57	68.59	69.25	69.44	69.78	68.67	71.99	71.43	70.80
1B074-2	157:20:28:17:200	68.82	69.37	69.57	68.68	69.16	69.50	69.88	68.76	74.36	73.74	70.93
1B075-2	158: 1:16:42:750	68.82	69.44	69.60	68.68	69.38	69.50	69.81	68.67	76.07	75.93	70.93
1B075-4	159: 2:25:10:650	64.14	64.19	63.17	62.27	63.92	64.07	63.10	62.29	72.35	72.24	64.65
1B075-7	160:19:56:20: 47	68.88	69.62	69.76	68.87	69.38	69.62	69.88	68.88	74.59	74.18	70.99
1B076-4	160:19:57:29:204	68.88	69.59	69.70	68.87	69.38	69.62	69.88	68.88	74.36	74.12	70.93
1B076-7	160:20: 6:14: 17	68.94	69.68	69.76	68.87	69.41	69.65	70.04	68.88	74.12	73.87	70.93
1B077-7	160:20:12:50:998	69.01	69.68	69.76	68.84	69.38	69.75	70.01	68.88	74.00	73.87	71.18
1B078-7	160:21:18:51:750	69.07	69.87	69.95	69.00	69.50	69.96	70.13	68.95	75.07	74.99	71.05
1B079-7	160:21:25:16:297	69.07	69.87	69.95	69.06	69.44	69.90	70.13	69.01	76.01	75.93	71.18
1B080-7	160:21:37:41:759	69.10	69.97	69.98	69.00	69.56	69.93	70.20	68.95	76.96	76.75	70.99
1B081-7	161: 0:16:16:316	69.07	69.72	69.95	68.94	69.44	69.87	70.13	68.88	71.17	70.86	71.05
1B082-7	161: 0:34:19:522	69.07	69.87	69.95	68.87	69.50	69.81	70.13	68.91	75.42	75.24	71.18
1B083-7	161: 2:14:42:737	69.22	70.09	69.95	68.87	69.62	69.99	70.13	68.91	77.19	77.24	71.18
1B084-1	161:17:21:22:780	69.01	69.81	69.76	68.81	69.41	69.75	69.91	68.88	71.17	70.74	70.99
1B084-6	161:17:22:32:960	69.01	69.81	69.76	68.81	69.50	69.68	70.01	68.82	71.40	71.11	71.18
1B085-1	161:17:30:46:751	69.01	69.72	69.79	68.84	69.50	69.81	69.94	68.88	73.23	72.99	71.18
1B086-1	161:17:38:23:408	69.04	69.81	69.70	68.75	69.38	69.81	70.07	68.79	73.94	73.74	70.93
1B087-1	161:18:55:24:190	69.10	69.93	69.88	68.81	69.56	69.84	70.13	68.88	72.11	71.61	70.93
1B088-1	161:19:15:46:144	69.10	69.97	69.95	68.81	69.53	69.93	70.13	68.91	75.54	74.93	71.30
1B089-1	161:20:23:25: 84	69.22	69.97	69.95	68.81	69.62	69.99	70.04	68.88	70.69	70.24	71.18

S082B-EDB
TEMPERATURE DATA - CONTINUED
PAGE 2- 3 7- 8-75 AT 8 HOURS 2 MINS 59 SECS

DIFFERENCE TEMPERATURES

		LID-BASE (-1.3 DEGF TO 1.3 DEGF)				SIDE-SIDE (-2.5 DEGF TO 2.5 DEGF)				XUV MON (67.5 DEGF TO 72.5 DEGF)		
FRAME	TIME	FNT (C089)	F CENT (C093)	R CENT (C094)	REAR (C207)	FNT (C208)	F CENT (C216)	R CENT (C222)	REAR (C223)	FNT (C217)	CENT (C219)	REAR (C220)
1B064-2	156:20:49:41:885	.53	.43	.35	.83	-.03	-.98	-.46	-.53	70.89	70.18	69.62
1B065-2	156:20:53:57:123	.50	.42	.33	.82	-.05	-.96	-.41	-.54	70.86	70.18	69.62
1B066-8	156:20:59:22:605	.45	.42	.35	.80	-.08	-.90	-.46	-.57	70.86	70.18	69.62
1B067-2	156:21: 2:20:622	.51	.42	.38	.82	-.07	-.90	-.44	-.58	71.10	70.18	69.62
1B068-2	156:21: 6:43:102	.46	.42	.38	.82	-.08	-.86	-.41	-.62	71.10	70.18	69.62
1B068-6	156:21: 7:52:858	.47	.37	.39	.82	-.08	-.89	-.41	-.63	70.98	70.18	69.62
1B069-1	156:21:14: 0: 83	.58	.42	.37	.80	-.11	-.90	-.41	-.69	71.10	70.18	69.62
1B069-2	156:21:24:42: 15	.42	.36	.37	.79	-.09	-1.00	-.40	-.83	71.23	70.18	69.62
1B069-8	156:21:29:15:251	.39	.35	.37	.78	-.08	-1.02	-.40	-.83	71.23	70.22	69.62
1B070-1	156:21:31:58:752	.43	.30	.35	.80	-.11	-1.04	-.36	-.85	71.35	70.18	69.68
1B070-2	156:22:19:50:338	.42	.16	.20	.68	-.05	-.87	-.34	-.73	71.23	70.22	69.65
1B070-8	156:22:24:23: 83	.42	.22	.20	.70	-.04	-.90	-.34	-.75	71.23	70.31	69.74
1B071-1	156:22:27: 6:591	.43	.21	.20	.70	-.07	-.90	-.36	-.73	71.23	70.31	69.74
1B071-2	156:22:37:48:820	.42	.20	.20	.68	-.07	-.96	-.33	-.81	71.38	70.31	69.71
1B071-8	156:22:42:22: 83	.42	.18	.18	.68	-.07	-.98	-.32	-.85	71.41	70.31	69.74
1B072-1	156:22:45: 5:840	.39	.18	.25	.70	-.05	-.98	-.28	-.87	71.53	70.28	69.68
1B072-2	156:22:55:47:506	.42	.12	.20	.68	-.07	-.98	-.34	-.94	71.44	70.31	69.74
1B072-4	156:22:56:22:497	.39	.02	.19	.70	-.07	-.95	-.34	-.96	71.50	70.31	69.81
1B073-2	157:20: 8:16:510	.64	.58	.43	.88	-.01	-1.02	-.66	-.52	70.73	70.12	69.53
1B074-1	157:20:12: 9:249	.64	.59	.47	.88	-.01	-.98	-.50	-.52	70.92	70.18	69.50
1B074-2	157:20:28:17:200	.59	.53	.45	.88	-.05	-1.03	-.48	-.52	71.10	70.12	69.46
1B075-2	158: 1:16:42:750	.59	.49	.43	.90	-.03	-1.04	-.48	-.52	71.10	70.12	69.53
1B075-4	159: 2:25:10:650	-.29	-.40	-.38	-.40	-.32	-.34	-.57	-.56	64.20	63.63	63.17
1B075-7	160:19:56:20: 47	.53	.42	.37	.78	-.03	-1.10	-.46	-.69	71.23	70.22	69.62
1B076-4	160:19:57:29:204	.57	.39	.39	.81	-.04	-1.13	-.45	-.70	71.29	70.22	69.62
1B076-7	160:20: 6:14: 17	.51	.35	.37	.76	-.04	-1.07	-.46	-.77	71.35	70.18	69.62
1B077-7	160:20:12:50:998	.49	.33	.35	.76	-.07	-1.10	-.44	-.85	71.41	70.25	69.62
1B078-7	160:21:18:51:750	.46	.20	.20	.70	-.05	-.97	-.37	-.74	71.38	70.37	69.74
1B079-7	160:21:25:16:297	.43	.21	.20	.68	-.07	-.98	-.36	-.73	71.47	70.34	69.74
1B080-7	160:21:37:41:759	.41	.12	.20	.68	-.08	-1.07	-.36	-.69	71.60	70.37	69.65
1B081-7	161: 0:16:16:316	.46	.25	.20	.75	-.08	-.99	-.41	.50	71.35	70.37	69.74
1B082-7	161: 0:34:19:522	.33	.22	.26	.76	-.08	-1.14	-.41	.50	71.60	70.34	69.68
1B083-7	161: 2:14:42:737	.35	.05	.24	.74	-.07	-1.18	-.38	.48	71.72	70.43	69.65
1B084-1	161:17:21:22:780	.49	.25	.33	.76	-.05	-1.07	-.44	-.54	71.35	70.31	69.56
1B084-6	161:17:22:32:960	.50	.22	.30	.80	-.03	-1.10	-.44	-.52	71.35	70.22	69.62
1B085-1	161:17:30:46:751	.47	.25	.33	.79	-.04	-1.08	-.46	-.53	71.41	70.34	69.62
1B086-1	161:17:38:23:408	.47	.25	.33	.80	-.04	-1.12	-.41	-.53	71.50	70.31	69.62
1B087-1	161:18:55:24:190	.37	.13	.26	.95	-.07	-1.06	-.36	-.46	71.35	70.37	69.59
1B088-1	161:19:15:46:144	.41	.12	.26	.78	-.08	-1.07	-.38	-.46	71.60	70.37	69.62
1B089-1	161:20:23:25: 84	.37	.06	.21	.75	-.07	-1.04	-.34	-.42	71.53	70.43	69.62

S082B-EDB
TEMPERATURE DATA 7- 8-75 AT 8 HOURS 2 MINS 59 SECS
PAGE 1- 4

ABSOLUTE TEMPERATURES
(67.5 TO 72.5)

FRAME	TIME	BASE FNT (C209)	BASE F CENT (C210)	BASE R CENT (C212)	BASE REAR (C213)	SIDE FNT (C214)	SIDE F CENT (C215)	SIDE R CENT (C224)	SIDE REAR (C225)	SLIT PLATE (68 TO 78 DEGF) TOP (C084)	SLIT PLATE (68 TO 78 DEGF) BOT (C087)	PRI MIR (68 TO 78 DEGF) (C085)
1B090-1	161:20:32:57:555	69.22	70.00	69.95	68.97	69.62	69.96	70.17	68.95	73.71	73.37	71.18
1B091-1	161:20:49:58:875	69.32	70.00	69.95	68.87	69.65	70.05	70.20	68.91	75.60	75.37	71.43
1B091-7	161:20:53:25:131	69.35	69.97	69.95	68.87	69.62	70.12	70.20	68.95	75.54	75.37	71.24
1B092-1	161:21:58:22:619	69.38	70.19	69.88	68.75	69.62	69.93	70.20	68.95	75.30	75.43	71.18
1B093-1	161:22:26:42:183	69.32	70.12	69.98	68.87	69.65	70.15	70.20	68.98	76.36	75.93	71.43
1B094-1	162: 1:39:49:473	69.16	70.00	69.88	68.87	69.62	69.93	70.13	68.88	77.25	77.37	71.05
1B095-1	162:18:30:49:678	68.94	69.62	69.73	68.84	69.38	69.62	69.94	68.88	74.12	73.87	70.80
1B096-8	162:18:42:38:426	68.97	69.68	69.76	68.84	69.44	69.65	70.01	68.88	74.59	74.43	70.93
1B097-1	162:18:47:42:876	68.97	69.72	69.85	68.84	69.44	69.75	69.94	69.38	74.83	74.43	71.18
1B098-1	162:19:44:13:479	69.07	69.93	69.82	68.93	69.41	69.65	70.13	69.01	69.93	69.61	70.99
1B099-1	162:19:48:28:716	69.10	69.84	69.95	68.87	69.38	69.75	70.07	69.01	71.17	70.86	71.05
1B099-6	162:19:49:13:731	69.07	69.87	69.82	68.93	69.38	69.81	70.13	68.95	71.40	71.18	71.05
1B100-7	162:19:53:53:950	69.10	69.87	69.82	68.87	69.38	69.75	70.13	68.98	72.70	72.43	71.18
1B101-8	162:19:58:31:261	69.19	69.90	69.82	68.93	69.44	69.75	70.13	69.01	73.29	73.37	70.93
1B102-6	162:20: 4:13:786	69.19	69.87	69.88	68.93	69.41	69.75	70.17	69.01	74.00	73.74	70.99
1B102-8	162:20: 8:28:985	69.19	69.93	69.88	68.90	69.44	69.81	70.17	69.01	74.24	74.12	71.18
1B102-8	162:20: 9:13:991	69.19	69.93	69.88	68.93	69.41	69.75	70.17	69.01	74.42	74.12	71.18
1B102-8	162:20:14:13:650	69.25	70.00	69.88	68.93	69.47	69.81	70.20	69.04	74.47	74.37	71.24
1B103-1	162:20:19:12:702	69.38	69.93	69.95	69.00	69.50	69.93	70.20	69.04	74.65	74.43	71.18
1B103-7	162:20:23:46:187	69.22	69.93	69.95	69.06	69.50	69.87	70.26	69.07	74.59	74.62	71.18
1B103-8	162:20:29:14:212	69.32	69.93	69.95	69.09	69.50	69.87	70.20	68.58	74.83	74.87	71.18
1B104-1	162:21:26: 4:920	69.19	69.93	70.20	69.12	69.53	69.99	70.29	69.13	73.88	73.62	71.30
1B104-1	162:21:31: 4:940	69.13	69.93	70.14	69.09	69.53	70.05	70.29	69.07	75.30	75.24	71.43
1B104-8	162:21:36: 5: 5	69.10	70.00	70.10	69.09	69.65	70.02	70.29	69.07	76.25	76.12	71.43
1B105-2	162:21:40:17:725	69.10	70.00	70.14	69.25	69.53	70.05	70.26	69.04	76.48	76.62	71.30
1B106-6	162:22: 6: 7: 94	69.19	70.06	70.14	69.19	69.56	70.05	70.29	69.07	77.07	77.00	71.24
1B106-7	163: 0:26:24:268	69.07	70.00	70.07	69.00	69.50	69.93	70.20	69.01	72.58	72.12	71.49
1B107-7	163: 0:32: 7: 0	69.10	69.84	70.07	69.00	69.50	69.90	70.26	69.01	74.47	74.31	71.24
1B108-7	163: 0:36:22:487	69.10	69.93	70.01	69.06	69.50	69.93	70.20	69.01	75.54	75.37	71.30
1B109-3	163: 0:37: 7:243	69.04	69.93	70.01	69.00	69.56	69.99	70.20	69.01	75.60	75.56	71.30
1B110-4	163: 0:41: 8:973	69.10	69.97	69.98	69.06	69.56	69.93	70.26	69.01	76.36	76.18	71.49
1B111-5	163: 0:46: 7:957	69.19	69.93	70.01	69.00	69.53	69.96	70.20	69.01	76.96	76.68	71.18
1B112-5	163: 0:51:12:442	69.19	70.06	69.98	69.06	69.62	69.90	70.20	69.01	77.07	77.12	71.49
1B112-7	163: 1: 1:47:842	69.32	70.09	69.98	69.00	69.62	70.05	70.20	68.88	77.43	77.62	71.18
1B113-5	163: 1: 4:25:917	69.35	70.18	69.95	69.06	69.62	69.99	70.26	69.01	77.90	77.87	71.49
1B113-7	163:16: 1:19:913	69.07	69.93	69.98	68.97	69.44	69.87	70.07	68.95	71.64	71.11	71.05
1B114-7	163:16:19:18:867	69.07	70.00	69.98	69.00	69.50	69.90	70.13	68.91	74.06	73.87	71.18
1B115-7	163:17:31:33:408	69.10	70.09	69.98	69.00	69.56	69.99	70.13	68.95	72.11	71.99	71.18
1B117-5	163:17:50:43:162	69.19	70.09	69.95	68.93	69.62	69.99	70.20	68.95	73.71	73.43	71.24
1B117-7	163:18: 1: 2:806	69.10	70.09	69.98	68.93	69.62	69.96	70.20	68.88	75.54	75.37	71.18
1B118-7	163:19:16:40:128	69.25	70.12	69.98	68.87	69.62	70.02	70.20	68.95	75.60	75.62	71.30

S082B-EDB
TEMPERATURE DATA 7- 8-75 AT 8 HOURS 2 MINS 59 SECS
PAGE 1- 5

ABSOLUTE TEMPERATURES
(67.5 TO 72.5)

FRAME	TIME	BASE				SIDE				SLIT PLATE (68 TO 78 DEGF)		PRI MIR (68 TO 78 DEGF)
		FNT (C209)	F CENT (C210)	R CENT (C212)	REAR (C213)	FNT (C214)	F CENT (C215)	R CENT (C224)	REAR (C225)	TOP (C084)	BOT (C087)	(C085)
1B119-7	163:19:31:52:550	69.28	70.18	70.01	68.84	69.62	70.12	70.26	68.95	76.72	76.68	71.43
1B120-7	163:20:35:27:902	69.32	70.22	70.14	68.93	69.65	70.15	70.26	68.88	72.11	71.74	71.18

S082B-EDB
TEMPERATURE DATA - CONTINUED
PAGE 2- 4 7- 8-75 AT 8 HOURS 2 MINS 59 SECS

DIFFERENCE TEMPERATURES

FRAME	TIME	LID-BASE (-1.3 DEGF TO 1.3 DEGF) FNT (C089)	F CENT (C093)	R CENT (C094)	REAR (C207)	SIDE-SIDE (-2.5 DEGF TO 2.5 DEGF) FNT (C208)	F CENT (C216)	R CENT (C222)	REAR (C223)	XUV MON (67.5 DEGF TO 72.5 DEGF) FNT (C217)	CENT (C219)	REAR (C220)
1B090-1	161:20:32:57:555	.35	.12	.25	.77	-.08	-1.06	-.32	-.44	71.60	70.22	69.62
1B091-1	161:20:49:58:875	.34	.09	.25	.76	-.11	-1.02	-.33	-.44	71.60	70.43	69.62
1B091-7	161:20:53:25:131	.34	.06	.25	.79	-.11	-1.06	-.33	-.41	71.60	70.37	69.62
1B092-1	161:21:58:22:619	.10	-.03	.25	.76	-.08	-1.12	-.29	-.41	71.63	70.37	69.62
1B093-1	161:22:26:42:183	.30	.02	.21	.76	-.11	-1.02	-.29	-.44	71.66	70.43	69.68
1B094-1	162: 1:39:49:473	.33	.06	.25	.76	-.07	-1.24	-.38	-.48	71.78	70.43	69.68
1B095-1	162:18:30:49:678	.53	.38	.37	.78	-.03	-1.14	-.46	-.56	71.29	70.22	69.62
1B096-8	162:18:42:38:426	.49	.33	.35	.76	-.07	-1.12	-.44	-.73	71.41	70.22	69.62
1B097-1	162:18:47:42:876	.47	.28	.35	.76	-.07	-1.12	-.41	-.74	71.47	70.22	69.68
1B098-1	162:19:44:13:479	.42	.16	.23	.70	-.07	-.90	-.40	-.74	71.13	70.31	69.78
1B099-1	162:19:48:28:716	.47	.18	.20	.72	-.04	-.89	-.36	-.73	71.10	70.31	69.74
1B099-6	162:19:49:13:731	.45	.20	.21	.68	-.04	-.94	-.36	-.77	71.13	70.37	69.74
1B100-7	162:19:53:53:950	.43	.18	.20	.68	-.09	-.90	-.37	-.79	71.10	70.37	69.74
1B101-8	162:19:58:31:261	.42	.16	.18	.70	-.08	-.94	-.38	-.81	71.10	70.31	69.74
1B102-6	162:20: 4:13:786	.35	.20	.20	.68	-.17	-.89	-.36	-.85	71.13	70.37	69.74
1B102-8	162:20: 8:28:985	.33	.17	.17	.68	-.16	-.85	-.36	-.89	71.13	70.37	69.74
1B102-8	162:20: 9:13:991	.33	.16	.18	.67	-.17	-.85	-.38	-.89	71.10	70.37	69.74
1B102-8	162:20:14:13:650	.30	.17	.18	.67	-.16	-.87	-.38	-.94	71.07	70.34	69.74
1B103-1	162:20:19:12:702	.30	.14	.18	.68	-.15	-.85	-.36	-.98	71.10	70.34	69.78
1B103-7	162:20:23:46:187	.30	.14	.16	.64	-.16	-.81	-.37	-1.02	71.10	70.37	69.71
1B103-8	162:20:29:14:212	.26	.13	.16	.63	-.16	-.81	-.34	-1.04	71.10	70.34	69.78
1B104-1	162:21:26: 4:920	.38	.10	.09	.58	-.08	-.81	-.27	-.81	71.13	70.34	69.87
1B104-1	162:21:31: 4:940	.37	.16	.10	.59	-.08	-.81	-.27	-.81	71.29	70.37	69.99
1B104-8	162:21:36: 5: 5	.39	.12	.10	.59	-.07	-.91	-.27	-.81	71.29	70.43	69.93
1B105-2	162:21:40:17:725	.40	.10	.10	.59	-.08	-.89	-.25	-.83	71.35	70.37	69.87
1B106-6	162:22: 6: 7: 94	.35	.16	.10	.59	-.09	-.96	-.23	-.89	71.41	70.37	69.78
1B106-7	163: 0:26:24:268	.43	.18	.12	.68	-.07	-.91	-.36	-.56	71.38	70.43	69.78
1B107-7	163: 0:32: 7: 0	.39	.18	.14	.68	-.09	-.99	-.36	-.56	71.47	70.43	69.74
1B108-7	163: 0:36:22:487	.42	.16	.16	.70	-.09	-1.04	-.36	-.56	71.53	70.43	69.78
1B109-3	163: 0:37: 7:243	.37	.16	.13	.71	-.11	-1.04	-.36	-.56	71.53	70.43	69.74
1B110-4	163: 0:41: 8:973	.35	.14	.16	.70	-.09	-1.06	-.36	-.54	71.63	70.43	69.74
1B111-5	163: 0:46: 7:957	.34	.12	.14	.69	-.15	-1.11	-.35	-.54	71.66	70.43	69.74
1B112-5	163: 0:51:12:442	.33	.10	.12	.68	-.15	-1.14	-.36	-.58	71.72	70.46	69.74
1B112-7	163: 1: 1:47:842	.25	.01	.16	.68	-.17	-1.18	-.36	-.52	71.78	70.43	69.74
1B113-5	163: 1: 4:25:917	.25	.02	.16	.66	-.16	-1.19	-.34	-.53	71.84	70.46	69.68
1B113-7	163:16: 1:19:913	.47	.15	.20	.72	-.01	-1.25	-.41	-.83	71.50	70.37	69.65
1B114-7	163:16:19:18:867	.47	.12	.18	.72	-.07	-1.20	-.40	-.71	71.72	70.40	69.68
1B115-7	163:17:31:33:408	.42	.06	.18	.74	-.07	-1.00	-.37	-.54	71.60	70.50	69.74
1B117-5	163:17:50:43:162	.39	.09	.18	.72	-.07	-1.16	-.36	-.52	71.84	70.43	69.74
1B117-7	163:18: 1: 2:806	.33	.04	.18	.72	-.11	-1.21	-.36	-.52	71.78	70.46	69.74
1B118-7	163:19:16:40:128	.35	.01	.18	.75	-.08	-1.06	-.35	-.48	71.60	70.43	69.68

S082B-EDB
TEMPERATURE DATA - CONTINUED
PAGE 2- 5 7- 8-75 AT 8 HOURS 2 MINS 59 SECS

---------- DIFFERENCE TEMPERATURES ----------

		---------- LID-BASE ---------- (-1.3 DEGF TO 1.3 DEGF)				---------- SIDE-SIDE ---------- (-2.5 DEGF TO 2.5 DEGF)				------- XUV MON------ (67.5 DEGF TO 72.5 DEGF)		
FRAME	TIME	FNT (C089)	F CENT (C093)	R CENT (C094)	REAR (C207)	FNT (C208)	F CENT (C216)	R CENT (C222)	REAR (C223)	FNT (C217)	CENT (C219)	REAR (C220)
18119-7	163:19:31:52:550	.30	-.01	.22	.75	-.11	-1.06	-.32	-.45	71.72	70.43	69.62
18120-7	163:20:35:27:902	.26	-.07	.16	.75	-.11	-.99	-.32	-.43	71.60	70.50	69.68

S082B-EDB
TEMPERATURE DATA 7- 8-75 AT 8 HOURS 2 MINS 59 SECS
PAGE 1- 6

ABSOLUTE TEMPERATURES
(67.5 TO 72.5)

FRAME	TIME	BASE FNT (C209)	BASE F CENT (C210)	BASE R CENT (C212)	BASE REAR (C213)	SIDE FNT (C214)	SIDE F CENT (C215)	SIDE R CENT (C224)	SIDE REAR (C225)	SLIT PLATE (68 TO 78 DEGF) TOP (C084)	SLIT PLATE (68 TO 78 DEGF) BOT (C087)	PRI MIR (68 TO 78 DEGF) (C085)
1B121-7	163:20:53:28:364	69.35	70.22	70.07	68.93	69.65	70.12	70.26	68.88	75.83	75.93	71.18
1B122-7	163:21: 2:13:208	69.13	70.00	69.76	68.75	69.44	69.75	70.13	68.88	70.10	69.61	71.05
1B123-7	163:21:26:16:104	69.47	70.37	70.01	68.93	69.75	70.27	70.26	68.95	77.31	77.25	71.43
1B125-6	163:22:24: 8:772	69.44	70.22	70.07	68.93	69.75	70.18	70.17	68.95	76.48	76.37	71.55
1B125-8	163:22:29:40:596	69.44	70.25	70.07	68.97	69.75	70.18	70.26	69.01	77.01	77.12	71.18
1B126-8	163:22:40:29:982	69.50	70.37	69.98	68.93	69.75	70.15	70.26	69.01	77.66	77.87	71.30
1B127-8	163:22:58: 9:927	69.63	70.43	70.04	68.93	69.81	70.21	70.29	69.01	77.43	77.62	71.43
1B134-3	164:18:20: 0:860	68.85	69.62	69.76	68.71	69.38	69.62	69.94	68.88	69.39	68.86	71.05
1B134-7	164:19:55: 6:166	69.10	69.87	69.79	68.81	69.50	69.93	70.01	68.88	71.52	71.11	70.93
1B135-7	164:19:59:21:403	69.10	69.87	69.85	68.84	69.47	69.87	70.04	68.95	72.47	72.12	70.93
1B136-5	164:20: 3: 5:575	69.10	69.84	69.82	68.81	69.50	69.87	70.04	68.88	72.76	72.62	71.30
1B137-5	164:20: 5: 6:310	69.10	69.93	69.82	68.87	69.50	69.84	70.01	68.88	73.06	72.87	70.99
1B138-5	164:20:10: 6:419	69.10	69.87	69.82	68.87	69.50	69.81	70.07	68.85	73.47	73.12	70.99
1B139-3	164:20:15: 6:655	69.13	69.93	69.82	68.84	69.56	69.87	70.01	68.82	73.65	73.43	70.93
1B139-5	164:20:20: 6:676	69.22	69.93	69.85	68.87	69.62	69.93	70.07	68.88	73.71	73.62	70.99
1B139-5	164:20:25: 6:696	69.32	69.93	69.88	68.87	69.62	69.99	70.13	68.88	73.88	73.74	71.05
1B139-7	164:20:30: 4:388	69.32	70.06	69.85	68.87	69.62	69.99	70.13	68.88	74.24	73.74	71.30
1B140-5	164:20:34:39:874	69.28	70.06	69.85	68.93	69.62	69.99	70.13	68.88	74.12	73.68	71.05
1B140-5	164:20:40: 7: 65	69.32	70.03	69.88	68.93	69.65	70.02	70.10	68.95	74.12	73.93	71.05
1B140-6	164:21:25:11:804	69.32	70.12	70.04	69.00	69.62	69.99	70.26	69.13	70.81	69.99	71.30
1B141-3	164:21:30:11:824	69.22	70.06	70.07	69.06	69.59	70.05	70.26	69.01	71.82	71.36	71.30
1B141-5	164:21:35:11:958	69.32	70.06	70.07	69.06	69.62	70.12	70.26	69.04	72.70	72.37	71.30
1B141-5	164:21:40:12:192	69.25	70.12	70.07	69.06	69.62	70.12	70.26	69.07	73.23	73.12	71.30
1B141-6	164:21:45:11:502	69.25	70.18	70.20	69.06	69.62	70.12	70.26	69.01	73.77	73.37	71.43
1B142-4	164:21:49:45:729	69.32	70.18	70.10	69.06	69.65	70.15	70.26	69.01	74.00	73.62	71.43
1B142-5	164:21:55:12:471	69.32	70.18	70.14	69.06	69.62	70.15	70.26	69.01	74.12	73.87	71.30
1B142-5	164:21:59:48:449	69.32	70.18	70.07	69.25	69.56	70.15	70.26	69.07	74.36	73.93	71.68
1B142-5	164:22: 0:12:607	69.32	70.18	70.07	69.12	69.68	70.15	70.29	69.07	74.12	73.87	71.43
1B143-1	164:22: 5:12:616	69.35	70.18	70.14	69.09	69.62	70.18	70.26	69.04	74.30	73.99	71.43
1B143-4	164:22: 9:52:167	69.32	70.25	70.01	69.09	69.62	70.15	70.26	69.13	74.24	74.12	71.43
1B143-5	164:22:10:12:633	69.28	70.22	70.14	69.09	69.65	70.24	70.29	69.07	74.36	74.37	71.37
1B143-5	164:22:15:11:561	69.38	70.31	70.20	69.19	69.65	70.15	70.29	69.13	74.18	74.12	71.49
1B144-3	164:22:59:32:634	69.35	70.22	70.26	69.19	69.65	70.24	70.52	69.13	71.28	70.68	71.49
1B144-6	164:23:13:34:340	69.41	70.22	70.23	69.19	69.65	70.24	70.39	69.13	73.53	73.37	71.93
1B145-6	164:23:31:56:865	69.35	70.37	70.32	69.19	69.65	70.30	70.46	69.19	74.71	74.43	71.55
1B146-6	165: 0:31:28: 0	69.56	70.43	70.14	69.12	69.62	70.15	70.52	69.16	75.66	75.62	71.68
1B147-6	165:17:40:10:847	68.88	69.62	69.70	68.81	69.25	69.56	70.07	68.88	71.64	71.11	70.93
1B148-6	165:17:51:38:875	68.88	69.56	69.70	68.81	69.32	69.62	69.88	68.82	75.12	74.99	70.80
1B150-3	165:19:19:45:114	69.10	69.93	69.88	68.81	69.53	69.87	70.01	68.88	73.77	73.24	71.18
1B150-6	165:19:26:18:112	69.19	70.00	69.88	68.84	69.53	69.87	70.07	68.91	74.18	74.37	70.93

S082B-EDB
TEMPERATURE DATA - CONTINUED
PAGE 2- 6 7- 8-75 AT 8 HOURS 2 MINS 59 SECS

---------- DIFFERENCE TEMPERATURES ----------

		LID-BASE (-1.3 DEGF TO 1.3 DEGF)				SIDE-SIDE (-2.5 DEGF TO 2.5 DEGF)				XUV MON (67.5 DEGF TO 72.5 DEGF)		
FRAME	TIME	FNT (C089)	F CENT (C093)	R CENT (C094)	REAR (C207)	FNT (C208)	F CENT (C216)	R CENT (C222)	REAR (C223)	FNT (C217)	CENT (C219)	REAR (C220)
1B121-7	163:20:53:28:364	.26	-.05	.18	.75	-.17	-1.11	-.30	-.46	71.78	70.43	69.68
1B122-7	163:21: 2:13:208	.38	.12	.26	.78	-.07	-1.01	-.38	-.44	71.23	70.28	69.53
1B123-7	163:21:26:16:104	.18	-.13	.16	.72	-.15	-1.07	-.34	-.41	71.97	70.46	69.68
1B125-6	163:22:24: 8:772	.25	-.07	.16	.75	-.12	-1.07	-.34	-.41	71.75	70.46	69.74
1B125-8	163:22:29:40:596	.25	-.04	.16	.72	-.13	-1.12	-.32	-.44	71.78	70.46	69.74
1B126-8	163:22:40:29:982	.19	-.08	.16	.72	-.15	-1.07	-.32	-.44	71.84	70.46	69.74
1B127-8	163:22:58: 9:927	.14	-.17	.15	.72	-.15	-1.16	-.28	-.46	71.90	70.46	69.68
1B134-3	164:18:20: 0:860	.51	.35	.35	.83	-.05	-1.06	-.49	-.49	71.13	70.31	69.62
1B134-7	164:19:55: 6:166	.39	.18	.26	.79	-.08	-1.07	-.41	-.48	71.38	70.37	69.62
1B135-7	164:19:59:21:403	.38	.20	.26	.76	-.10	-1.12	-.45	-.52	71.50	70.37	69.65
1B136-5	164:20: 3: 5:575	.40	.18	.29	.78	-.08	-1.14	-.46	-.53	71.47	70.37	69.62
1B137-5	164:20: 5: 6:310	.42	.20	.30	.80	-.07	-1.16	-.42	-.56	71.47	70.37	69.62
1B138-5	164:20:10: 6:419	.38	.18	.30	.78	-.11	-1.18	-.41	-.60	71.53	70.37	69.62
1B139-3	164:20:15: 6:655	.35	.20	.29	.78	-.16	-1.14	-.40	-.65	71.50	70.31	69.62
1B139-5	164:20:20: 6:676	.34	.18	.30	.76	-.17	-1.10	-.37	-.73	71.60	70.22	69.53
1B139-5	164:20:25: 6:696	.30	.16	.28	.77	-.16	-1.11	-.39	-.77	71.60	70.37	69.65
1B139-7	164:20:30: 4:388	.26	.16	.34	.75	-.17	-1.15	-.38	-.81	71.60	70.37	69.62
1B140-5	164:20:34:39:874	.28	.11	.28	.76	-.13	-1.11	-.33	-.82	71.63	70.37	69.56
1B140-5	164:20:40: 7: 65	.30	.10	.26	.75	-.15	-1.14	-.34	-.87	71.78	70.37	69.62
1B140-6	164:21:25:11:804	.33	.02	.16	.67	-.12	-.98	-.32	-.74	71.47	70.43	69.78
1B141-3	164:21:30:11:824	.28	.04	.16	.68	-.11	-.98	-.32	-.74	71.47	70.43	69.74
1B141-5	164:21:35:11:958	.30	.04	.15	.67	-.08	-.99	-.32	-.74	71.53	70.43	69.74
1B141-5	164:21:40:12:192	.30	.02	.14	.64	-.11	-1.02	-.32	-.83	71.53	70.43	69.78
1B141-6	164:21:45:11:502	.28	-.01	.14	.64	-.11	-1.02	-.27	-.82	71.63	70.43	69.74
1B142-4	164:21:49:45:729	.30	.02	.16	.67	-.11	-1.00	-.27	-.83	71.66	70.43	69.74
1B142-5	164:21:55:12:471	.28	-.01	.13	.64	-.11	-1.02	-.24	-.89	71.63	70.34	69.74
1B142-5	164:21:59:48:449	.25	-.05	.12	.64	-.11	-.99	-.24	-.94	71.72	70.43	69.78
1B142-5	164:22: 0:12:607	.25	-.03	.12	.64	-.13	-1.06	-.23	-.94	71.72	70.43	69.78
1B143-1	164:22: 5:12:616	.26	-.03	.08	.62	-.08	-1.02	-.23	-.96	71.72	70.43	69.78
1B143-4	164:22: 9:52:167	.24	-.07	.10	.62	-.08	-1.01	-.23	-.98	71.78	70.40	69.74
1B143-5	164:22:10:12:633	.26	-.07	.12	.63	-.09	-1.00	-.23	-.99	71.78	70.46	69.78
1B143-5	164:22:15:11:561	.26	-.08	.10	.62	-.11	-.99	-.23	-1.00	71.78	70.43	69.78
1B144-3	164:22:59:32:634	.26	-.08	-.01	.55	-.13	-.85	-.19	-.85	71.60	70.46	69.87
1B144-6	164:23:13:34:340	.26	-.07	-.03	.55	-.15	-.89	-.23	-.79	71.63	70.46	69.87
1B145-6	164:23:31:56:865	.22	-.15	-.01	.59	-.08	-1.02	-.23	-.79	71.84	70.46	69.87
1B146-6	165: 0:31:28: 0	.20	-.19	-.01	.55	-.12	-.97	-.19	-.94	71.72	70.46	69.78
1B147-6	165:17:40:10:847	.54	.42	.35	.84	-.04	-1.16	-.52	-.50	71.26	70.31	69.62
1B148-6	165:17:51:38:875	.54	.42	.37	.82	-.07	-1.16	-.49	-.49	71.50	70.31	69.68
1B150-3	165:19:19:45:114	.43	.16	.30	.76	-.07	-1.10	-.46	-.48	71.60	70.43	69.62
1B150-6	165:19:26:18:112	.43	.13	.26	.78	-.07	-1.20	-.46	-.46	71.72	70.43	69.65

S082B-EDB
TEMPERATURE DATA 7- 8-75 AT 8 HOURS 2 MINS 59 SECS
PAGE 1- 7

ABSOLUTE TEMPERATURES
(67.5 TO 72.5)

FRAME	TIME	BASE FNT (C209)	BASE F CENT (C210)	BASE R CENT (C212)	BASE REAR (C213)	SIDE FNT (C214)	SIDE F CENT (C215)	SIDE R CENT (C224)	SIDE REAR (C225)	SLIT PLATE (68 TO 78 DEGF) TOP (C084)	SLIT PLATE (68 TO 78 DEGF) BOT (C087)	PRI MIR (68 TO 78 DEGF) (C085)
1B151-6	165:19:39:29:357	69.19	70.00	69.85	68.84	69.62	69.93	70.04	68.91	75.30	74.93	71.24
1B152-6	165:20:53: 7:116	69.32	70.18	69.98	69.00	69.62	70.12	70.20	68.98	74.71	74.43	71.43
1B153-6	165:21: 0:42: 92	69.32	70.18	70.07	69.09	69.62	70.05	70.26	69.01	76.48	76.25	71.18
1B155-3	165:21:21:39:451	69.38	70.25	70.07	69.06	69.65	70.15	70.26	69.01	77.66	77.62	71.30
1B156-4	165:22:19:39:907	69.44	70.31	70.10	69.00	69.75	70.12	70.26	69.01	72.70	72.12	71.30
1B156-6	166:12:18:27:315	69.10	69.93	69.82	68.75	69.62	69.87	70.07	68.88	73.06	72.74	71.18
1B157-5	166:12:20: 0:994	69.10	69.93	69.82	68.75	69.56	69.81	70.01	68.85	73.53	73.24	70.74
1B157-6	166:12:42:35:495	69.22	70.00	69.95	68.81	69.56	69.90	70.07	68.82	76.96	77.00	71.05
1B158-6	166:13: 5:36:674	69.28	70.12	69.82	68.81	69.68	69.99	70.04	68.88	77.31	77.37	70.93
1B161-6	166:13: 9:36:912	69.32	70.09	69.82	68.81	69.62	69.99	70.04	68.82	77.49	77.50	71.05
1B162-3	166:13:52:26:553	69.32	70.12	69.88	68.81	69.65	69.93	70.13	68.88	72.70	72.24	71.30
1B163-3	166:14: 8:30:759	69.32	70.06	69.95	68.81	69.62	69.99	70.07	68.82	74.65	74.62	71.05
1B165-3	166:14:12:34:500	69.38	70.09	69.95	68.87	69.62	70.12	70.13	68.91	75.12	75.12	71.12
1B168-5	166:14:18:30:995	69.35	70.18	69.95	68.84	70.12	70.02	70.07	68.91	76.01	79.94	71.05
1B169-6	166:14:22:36:721	69.38	70.12	69.88	68.87	69.65	70.02	70.13	68.88	76.60	76.62	71.18
1B171-5	166:14:27:32:458	69.50	70.15	70.01	68.84	69.75	70.05	70.13	68.91	76.96	77.18	71.05
1B173-5	166:14:28:31:141	69.44	70.18	69.95	68.84	69.75	70.05	70.10	68.88	76.96	77.06	71.18
1B174-6	166:14:32:46:858	69.44	70.22	69.95	68.87	69.75	70.05	70.13	68.91	77.19	77.25	71.12
1B175-7	166:14:38:12:341	69.35	70.22	69.95	68.84	69.65	70.12	70.13	68.91	77.49	77.44	71.43
1B176-3	166:15:21:53:464	69.13	70.00	69.63	68.56	69.38	69.81	70.01	68.82	71.76	71.43	70.80
1B177-3	166:15:32: 8:363	69.25	70.00	69.63	68.68	69.41	69.75	70.01	68.82	70.93	70.68	70.80
1B178-3	166:15:42:49:244	69.10	70.00	69.70	68.59	69.38	69.75	69.94	68.88	70.69	70.24	71.05
1B179-3	166:15:53: 6:962	69.10	70.00	69.70	68.59	69.41	69.65	69.97	68.91	70.34	69.99	70.93
1B180-3	166:16: 5:45:435	69.10	69.93	69.82	68.75	69.62	69.87	70.07	68.88	73.06	72.74	71.18
1B181-3	166:17: 2:39:680	69.22	70.00	69.95	68.81	69.56	69.90	70.07	68.82	76.96	77.00	71.05
1B182-3	166:17: 9:26:509	69.28	70.12	69.82	68.81	69.68	69.99	70.04	68.88	77.31	77.37	70.93
1B183-3	166:17:22:42:471	69.32	70.22	69.85	68.81	69.65	69.99	70.07	68.88	77.43	77.62	70.99
1B184-3	166:18:28:40:393	69.56	70.22	70.14	68.93	69.81	70.18	70.26	69.01	72.23	71.74	71.49
1B185-3	166:18:45:19:239	69.53	70.25	70.01	68.93	69.87	70.12	70.26	68.95	76.96	76.87	71.43
1B186-3	166:20:15:41:848	69.44	70.31	69.98	68.93	69.78	70.12	70.26	69.01	74.59	74.43	71.49
1B187-3	166:20:27:10:312	69.47	70.31	69.98	68.93	69.72	70.24	70.26	69.01	76.96	76.87	71.49
1B188-3	166:20:33:10: 44	69.50	70.37	70.07	68.84	69.75	70.18	70.26	68.95	77.43	77.44	71.49
1B189-3	166:22:19:36:146	69.56	70.43	70.04	69.00	69.78	70.30	70.29	68.95	78.14	78.37	71.30
1B190-3	167:18:13:48:348	69.07	69.72	69.70	68.71	69.44	69.62	69.88	68.79	76.96	76.87	70.80
1B191-3	167:18:18:15:335	69.10	69.81	69.67	68.75	69.50	69.62	69.78	68.76	77.19	77.37	70.93
1B192-3	167:21:29:45:554	69.10	70.00	69.73	68.81	69.62	69.81	69.97	68.88	77.43	77.44	71.05
1B192-3	167:21:34:45:699	69.25	70.00	69.73	68.81	69.65	69.87	70.01	68.88	77.49	77.62	70.93
1B192-3	167:21:39:45:708	69.10	70.03	69.82	68.81	69.68	69.87	70.01	68.88	77.49	77.75	70.93
1B192-6	168:11: 6:37:804	69.19	69.93	69.73	68.87	69.62	69.87	70.01	68.88	75.83	75.87	70.80
1B193-6	168:12:52:43:264	69.32	70.18	69.95	68.87	69.68	70.12	70.13	68.95	77.31	77.44	71.18

S082B-EDB
TEMPERATURE DATA - CONTINUED
PAGE 2- 7 7- 8-75 AT 8 HOURS 2 MINS 59 SECS

DIFFERENCE TEMPERATURES

		LID-BASE (-1.3 DEGF TO 1.3 DEGF)				SIDE-SIDE (-2.5 DEGF TO 2.5 DEGF)				XUV MON (67.5 DEGF TO 72.5 DEGF)		
FRAME	TIME	FNT (C089)	F CENT (C093)	R CENT (C094)	REAR (C207)	FNT (C208)	F CENT (C216)	R CENT (C222)	REAR (C223)	FNT (C217)	CENT (C219)	REAR (C220)
1B151-6	165:19:39:29:357	.37	.10	.28	.76	-.08	-1.29	-.46	-.60	71.78	70.43	69.62
1B152-6	165:20:53: 7:116	.34	.02	.14	.68	-.12	-1.14	-.37	-.70	71.72	70.46	69.74
1B153-6	165:21: 0:42: 92	.30	-.01	.14	.68	-.11	-1.20	-.37	-.70	71.84	70.56	69.74
1B155-3	165:21:21:39:451	.28	-.11	.13	.68	-.14	-1.21	-.33	-.60	71.97	70.56	69.74
1B156-4	165:22:19:39:907	.25	-.08	.10	.71	-.11	-1.11	-.34	-.49	71.75	70.50	69.74
1B156-6	166:12:18:27:315	.42	.16	.30	.80	-.08	-1.16	-.46	-.49	71.60	70.37	69.62
1B157-5	166:12:20: 0:994	.42	.17	.33	.81	-.07	-1.15	-.48	-.48	71.44	70.34	69.62
1B157-6	166:12:42:35:495	.35	.12	.30	.82	-.08	-1.16	-.45	-.48	71.78	70.37	69.56
1B158-6	166:13: 5:36:674	.30	.02	.29	.80	-.13	-1.27	-.40	-.48	71.78	70.37	69.62
1B161-6	166:13: 9:36:912	.34	.02	.30	.80	-.13	-1.27	-.41	-.48	71.84	70.37	69.53
1B162-3	166:13:52:26:553	.30	.02	.25	.78	-.11	-1.11	-.41	-.44	71.53	70.43	69.62
1B163-3	166:14: 8:30:759	.28	.06	.25	.76	-.17	-1.11	-.42	-.46	71.66	70.43	69.74
1B165-3	166:14:12:34:500	.30	-.01	.26	.79	-.13	-1.12	-.38	-.45	71.63	70.43	69.62
1B168-5	166:14:18:30:995	.18	.02	.26	.78	-.14	-1.18	-.38	-.46	71.75	70.43	70.15
1B169-6	166:14:22:36:721	.26	-.01	.26	.78	-.15	-1.19	-.38	-.46	71.78	70.43	69.65
1B171-5	166:14:27:32:458	.21	-.01	.26	.78	-.15	-1.23	-.38	-.48	71.78	70.43	69.68
1B173-5	166:14:28:31:141	.25	-.01	.28	.78	-.15	-1.19	-.36	-.46	71.84	70.43	69.62
1B174-6	166:14:32:46:858	.21	-.03	.25	.76	-.19	-1.27	-.37	-.45	71.84	70.43	69.62
1B175-7	166:14:38:12:341	.39	.09	.34	.82	-.06	-1.11	-.49	-.48	71.50	70.37	69.53
1B176-3	166:15:21:53:464	.37	.10	.33	.82	-.07	-1.07	-.48	-.48	71.47	70.37	69.56
1B177-3	166:15:32: 8:363	.39	.12	.30	.82	-.04	-1.07	-.48	-.48	71.38	70.34	69.62
1B178-3	166:15:42:49:244	.35	.12	.30	.80	-.08	-1.10	-.48	-.49	71.35	70.37	69.62
1B179-3	166:15:53: 6:962	.35	.12	.30	.82	-.08	-1.16	-.45	-.48	71.78	70.37	69.56
1B180-3	166:16: 5:45:435	.30	.02	.29	.80	-.13	-1.27	-.40	-.48	71.78	70.37	69.62
1B181-3	166:17: 2:39:680	.28	-.01	.30	.80	-.12	-1.27	-.42	-.48	71.78	70.37	69.62
1B182-3	166:17: 9:26:509	.28	-.01	.30	.78	-.11	-1.18	-.38	-.48	71.63	70.43	69.56
1B183-3	166:17:22:42:471	.26	-.02	.28	.80	-.15	-1.14	-.41	-.46	71.63	70.37	69.62
1B184-3	166:18:28:40:393	.20	-.08	.18	.72	-.13	-1.02	-.32	-.41	71.60	70.43	69.74
1B185-3	166:18:45:19:239	.18	-.07	.16	.72	-.19	-1.07	-.32	-.44	71.72	70.43	69.74
1B186-3	166:20:15:41:848	.20	-.08	.16	.72	-.13	-1.07	-.32	-.44	71.72	70.46	69.68
1B187-3	166:20:27:10:312	.18	-.08	.14	.72	-.16	-1.07	-.33	-.44	71.84	70.46	69.74
1B188-3	166:20:33:10: 44	.18	-.13	.16	.75	-.16	-1.07	-.34	-.44	71.90	70.46	69.74
1B189-3	166:22:19:36:146	.16	-.17	.14	.71	-.15	-1.14	-.29	-.41	71.97	70.46	69.74
1B190-3	167:18:13:48:348	.45	.26	.37	.82	-.08	-1.33	-.52	-.52	71.53	70.31	69.53
1B191-3	167:18:18:15:335	.43	.25	.37	.84	-.15	-1.33	-.50	-.52	71.63	70.22	69.62
1B192-3	167:21:29:45:554	.39	.16	.33	.78	-.11	-1.24	-.48	-.48	71.63	70.37	69.65
1B192-3	167:21:34:45:699	.35	.12	.30	.80	-.11	-1.29	-.44	-.48	71.72	70.43	69.62
1B192-3	167:21:39:45:708	.34	.08	.30	.80	-.12	-1.29	-.46	-.48	71.84	70.37	69.62
1B192-6	168:11: 6:37:804	.39	.17	.29	.78	-.11	-1.03	-.46	-.54	71.41	70.43	69.68
1B193-6	168:12:52:43:264	.30	.04	.22	.76	-.11	-.89	-.37	-.47	71.38	70.37	69.68

S082B-EDB
TEMPERATURE DATA 7- 8-75 AT 8 HOURS 2 MINS 59 SECS
PAGE 1- 8

ABSOLUTE TEMPERATURES
(67.5 TO 72.5)

FRAME	TIME	BASE FNT (C209)	BASE F CENT (C210)	BASE R CENT (C212)	BASE REAR (C213)	SIDE FNT (C214)	SIDE F CENT (C215)	SIDE R CENT (C224)	SIDE REAR (C225)	SLIT PLATE (68 TO 78 DEGF) TOP (C084)	SLIT PLATE (68 TO 78 DEGF) BOT (C087)	PRI MIR (68 TO 78 DEGF) (C085)
1B194-6	168:13: 9:16:214	69.47	70.09	69.98	68.93	69.75	70.05	70.13	68.95	78.02	77.94	71.24
1B195-1	168:16: 0:32:493	69.25	70.06	69.95	68.93	69.59	69.87	70.13	68.88	77.19	76.87	71.43
1B196-1	168:17:12: 5:170	69.41	70.31	70.04	69.06	69.65	70.05	70.26	68.98	75.30	75.24	71.49
1B197-1	168:17:17:39:216	69.35	70.22	69.98	69.06	69.68	70.12	70.26	69.04	76.48	76.43	71.18
1B198-7	169:11:43:10:990	69.25	70.06	69.82	68.84	69.62	69.87	70.01	68.91	70.63	70.11	70.93
1B198-8	169:11:44: 5:179	69.32	70.06	69.82	68.84	69.62	69.87	70.01	68.95	70.69	70.43	70.93
1B199-1	169:12: 4:38:284	69.35	70.09	69.88	68.84	69.65	69.96	70.01	68.88	76.07	76.25	70.99
1B200-1	169:12:21:16:483	69.41	70.18	69.88	68.97	69.65	69.90	70.07	68.88	77.49	77.62	71.30
1B201-1	169:15:13: 1:415	69.22	70.00	69.88	68.87	69.62	69.87	70.01	68.88	74.65	74.62	71.18

S082B-EDB
TEMPERATURE DATA - CONTINUED
PAGE 2- 8 7- 8-75 AT 8 HOURS 2 MINS 59 SECS

---------- DIFFERENCE TEMPERATURES ----------

		---------- LID-BASE ---------- (-1.3 DEGF TO 1.3 DEGF)				---------- SIDE-SIDE --------- (-2.5 DEGF TO 2.5 DEGF)				------- XUV MON------ (67.5 DEGF TO 72.5 DEGF)		
FRAME	TIME	FNT (C089)	F CENT (C093)	R CENT (C094)	REAR (C207)	FNT (C208)	F CENT (C216)	R CENT (C222)	REAR (C223)	FNT (C217)	CENT (C219)	REAR (C220)
1B194-6	168:13: 9:16:214	.22	-.02	.25	.75	-.15	-.99	-.36	-.48	71.60	70.43	69.68
1B195-1	168:16: 0:32:493	.30	.10	.25	.75	-.13	-1.24	-.41	-.73	71.75	70.43	69.74
1B196-1	168:17:12: 5:170	.25	-.09	.10	.62	-.15	-1.07	-.34	-.81	71.72	70.46	69.81
1B197-1	168:17:17:39:216	.24	-.08	.09	.62	-.17	-1.12	-.34	-.77	71.72	70.46	69.78
1B198-7	169:11:43:10:990	.35	.06	.24	.78	-.13	-1.20	-.46	-.45	71.60	70.43	69.62
1B198-8	169:11:44: 5:179	.30	.06	.26	.80	-.13	-1.19	-.46	-.46	71.60	70.43	69.62
1B199-1	169:12: 4:38:284	.29	.09	.26	.78	-.17	-1.15	-.44	-.46	71.63	70.43	69.65
1B200-1	169:12:21:16:483	.25	-.01	.28	.78	-.17	-1.27	-.41	-.45	71.84	70.43	69.62
1B201-1	169:15:13: 1:415	.35	.20	.25	.77	-.17	-1.13	-.46	-.48	71.60	70.37	69.74

ASSIGNED TASK COMPLETED