J. Maucha

SOLAR SATELLITE PROJECT

DATA HANDBOOK

for

THE HARVARD EUV SPECTROHELIOMETER ON ATM

by

William Harby and Edmond M. Reeves

HARVARD COLLEGE OBSERVATORY

60 GARDEN STREET CAMBRIDGE, MASS.

DATA HANDBOOK

for

THE HARVARD EUV SPECTROHELIOMETER ON ATM

by

William Harby and Edmond M. Reeves

Principal Investigator	R.W. Noyes
Principal Scientist	E.M. Reeves
Co-Investigator	G.L. Withbroe
Participating Scientists	A.K. Dupree
	P.V. Foukal
	M.C.E. Huber
	R. Levine
	E.M. Schmahl
	J.G. Timothy
	J.E. Vernazza

HARVARD COLLEGE OBSERVATORY

December 1975

Contents

List of acronyms v

List of figures ix

List of tables xii

1. INTRODUCTION 1

2. DESCRIPTION OF INSTRUMENT 11

2.1 General 11

2.2 Experiment Observing Modes 15

2.2.1 Mirror raster scan 16

2.2.2 Mirror line scan 27

2.2.3 Grating wavelength scan 28

2.3 Experiment Pointing 30

3. PROGRAM DESCRIPTION 43

3.1 ATM and S055 Development 43

3.2 Spacecraft Integration and Test 46

3.3 Calibration Rocket Program 47

3.4 Hα Telescope Development 48

3.5 Mission Operations 54

3.6 Instrument Activation, Anomalies, and Malfunctions 58

3.6.1 Orbital activation 58

3.6.2 Malfunctions and anomalies 60

4. NASA DATA PROCESSING SYSTEMS 71

4.1 Real-Time Data 72

4.2 Quick-Look Data 75

4.3 Final Data 76

4.4 Microfiche 77

4.4.1 Raster tab 80

4.4.2 Line tab 83

4.4.3 Line scan JBAR/COL tab 85
4.4.4 Line scan JBAR/COL plot 85
4.4.5 Line scan CHISQ/COL plot 88
4.4.6 Line scan SQI/LINE plot 88
4.4.7 Spectral scan tab 91
4.4.8 Corollary data 93
4.4.9 Grey-scale microfiche 96
4.4.10 Grey-scale line-scan picture 99
4.5 Tape Storage 101
5. SUPPORTING DOCUMENTS 103
5.1 *Microfiche and Hardcopy Guide* 103
5.2 *Scientific-User Tape Guide* 103
5.3 *S055 Mission Log Guide* 103
5.4 *Hα Film and Atlas Guide* 104
5.5 *Hα Atlas* 104
5.6 *Calibration Handbook* 104
5.7 *Corollary Data Guide* 105
5.8 *S055 Experiment Handbook* 105
5.9 *Pointing Reference Handbook* 105
Acknowledgments 107
References 109
Appendix I. Index of the data at HCO and NSSDC 111

List of Acronyms

ACN	Ascension Island
ACQ SS	Acquisition sun sensor
ACS	Attitude control system
ADDT	All-digital data tape
AEO	ATM Experiments Officer
AGO	Santiago, Chile
AM	Airlock module
AOS	Acquisition of signal
APCS	Attitude and pointing-control system
APRT	Aperture
ASAP	Auxiliary storage and Playback (assembly)
ASC	Ascension
AS&E	American Science and Engineering, Inc.
ATM	Apollo Telescope Mount
ATMDC	ATM Digital Computer
AUTO or AUT	Automatic
β	Minimum angle between earth-sun line and the vehicle orbital plane
BB	Building Block
BBRC	Ball Brothers Research Corporation
BDA	Bermuda
bp	Barber Pole
Calroc	Calibration rocket
CAPCOM	Capsule communicator
CBRM	Charger/battery/regulator module
CCATS	Communications command and telemetry system
C&DP	Control and display panel
CDR	Commander
CIU	Computer interface unit
CLUSTER	SWS plus CSM (to be used synonymously with "Orbital assembly")
CM	Command module
CMG	Control moment gyro, part of attitude control system
CONUS	Continental United States
COORD	Coordinates (pointing)
CRO	Carnarvon, Australia
CRT	Cathode-ray tube
CSM	Command and service module
CTR	Counter
CUT	Compressed user tape (engineering data)
CYI	Grand Canary Island
DAS	Digital address system
DET	Detector
DN	Down
DOY	Day of year
D&PS	Design and performance specification
DRF	Data requirement form
DTV	Digital to television
ΔT	Differential temperature; or Integration Time
EMC	Electromagnetic compatibility
EMI	Electromagnetic interference
EO	Experiments Officer
EPCS	Experiment-pointing control subsystem
EPEA	Experiment-pointing electronic assembly

EREP	Earth resources experiment package
ESE	Electrical support equipment
ESR	Effective sunrise
ESS	Experiment support system
EVA	Extravehicular activity
EXP	Experiment
E&W	Emergency and warning
FAO	Flight Activities Officer
FD	Flight Director
FLR	Flare
FOMR	Flight operations management room
FOV	Field of view
FPM or FR/MIN	Frames per minute
FSS	Fine sun sensor
FWHM	Full width at half maximum
GAMMA RR	Roll angle in minutes
GAS	Grating auto-scan
GDO	Guidance officer
GDS	Goldstone, California
GET	Ground elapsed time
GFE	Government-furnished equipment
GMT	Greenwich Mean Time
GNCS	Guidance, navigation, and control system
GRAT	Grating
GSE	Ground support equipment
GSFC	Goddard Space Flight Center
GWM	Guam
GYM	Guaymas, Mexico
Hα1	Hydrogen α telescope number 1
Hα2	Hydrogen α telescope number 2
HAO	High Altitude Observatory
HAW	Hawaii
HCO	Harvard College Observatory
HOSC	Huntsville Operations Support Center
HSK	Honeysuckle, Australia
HSP	High-speed printer
HVPS	High-voltage power supply
IMD	Inhibit momentum dump
INCR	Increase
INH	Inhibit
INIT	Initiate
INTEN	Intensity
IR	Infrared
IU	Instrument unit
IVA	Intravehicular activity
JOP	Joint Observing Program
JSC	Johnson Space Center
KBPS	Kilo bits per second
KSC	Kennedy Space Center
L	Left
LC-39	Launch Complex 39 at KSC
LOS	Loss of signal; line of sight
L/R	Left/right
LV	Launch vehicle
LVPS	Low-voltage power supply
M	Momentary (on switch)
MAD	Madrid, Spain
MAG	Magazine
MAN	Manual
MAR	Mirror auto-scan

MCC	Mission Control Center
MD	Mission day
MDA	Multiple docking adapter
MDRS	Mission data retrieval system
MET	Mission elapsed time
MIL	Merritt Island, Florida
MIN	Minute(s)
MLA	Merritt Island
MLS	Mirror line scan
MOC	Mission operations computer
MOCR	Mission operations control room
MON	Monitor
MOPS	Mission operations planning system
MRD	Mission requirements document
MR	Mechanical reference
MRS	Movable reticle system
MSFC	Marshall Space Flight Center
MSFN	Manned space flight network
NASA	National Aeronautics and Space Administration
NM	Nautical mile
NOAA	National Oceanographic and Atmospheric Administration
NRL	Naval Research Laboratory
NSSDC	National Space Science Data Center
OA	Orbital assembly (SWS plus CSM; to be used synonymously with "Cluster")
ODB	Operational data book
OMSF	Office of Manned Space Flight
OPR	Operate
OPS	Operations
OPT	Optical
OR	Optical reference
ORB	Orbit
OVRD	Override
OWS	Orbital workshop (ground-outfitted S-IVB Stage)
PAD	Program approval document
PCM/DDAS	Pulse code modulation/digital-data acquisition system
PCS	Pointing control system
PDU	Photomultiplier detector unit
PE	Perkin-Elmer Corp.
PES	Pointing error sensor
PI	Principal Investigator
PLN	Planning
PLT	Pilot
PRI or PRIM	Primary
PROAT	Computer program for UV profile analysis
PTG	Pointing
PWR	Power
R	Right
RCDR	Recorder
REF or ref	Reference
REV	Revolution
RF	Radio frequency
RG	Rate gyro
RSDP	Remote site data processor
RT	Real time
RTCC	Real-time computer complex

SAA	South Atlantic Anomaly
SAL	Scientific airlock
SAN	Santiago, Chile
SAP	Solar activity pad
SCAN SPECT	Scanning spectrometer/ S055
SCCU	Spectrometer checkout and control unit
SEC	Secondary; second(s)
SEL or sel	Selectors
S/EOR-EOL	Start/end of raster-end of line
S/HK	Systems housekeeping
SI	Solar inertial
S-IB	First stage of saturn IB launch vehicle
SL	Skylab
SL1	First Skylab launch
SL2	First Skylab manned mission
SL3	Second Skylab manned mission
SL4	Third Skylab manned mission
SLA	Spacecraft lunar module adapter
SLOH	Skylab Operations Handbook
SM	Service module
SPAN	Solar particle alert network
SPT	Science pilot
SR	Sunrise
SS	Sunset
SRT	Sun remaining time
STADAN	Space tracking and data acquisition network
STRT	Start
SUT	Scientific user tape
SWS	Saturn workshop (PS/MDA/ATM/ AM/OWS/IU/ATM deployment assembly)
SYS	System
TACS or TAC	Thruster attitude control system
tb	Talk back (panel indicator)
TCS	Thermal control system
TGT	Target (on sun)
THRM	Thermal
TM	Telemetry
TMU	Thermal Mechanical unit
TTY	Teletype
TVD	TV Downlink
U/D	Up/down
UMB	Umbilical
UN	Unattended
USB	Unified S/band
UV	Ultraviolet
VAB	Vehicle assembly building
VAN	USNS Vanguard
VTR	Video tape recording
WCIU	Workshop computer interface unit
WLC	White-light coronagraph
X-IOP/Z	Solar inertial attitude
X-REA	X-ray event analyzer
XUV	Extreme ultraviolet
Z-LV	Z local vertical attitude
Z-LV(E)	Earth pointing attitude
Z-LV(R)	Rendezvous pointing attitude

List of Figures

1. Skylab orbital configuration. 4
2. Optical schematic of the spectroheliometer. 12
3. Exploded view of the spectroheliometer. 13
4. Diagram of the primary mirror raster scan. 17
5. Diagram of the grating wavelength scan. 29
6. Diagram of ATM pointing coordinate system. 31
7. Composite of Hα pictures, raster data, grey-scale picture spectral data, and corollary data. 35
7(a). Page from Hα atlas showing use of SO55 overlay. 36
7(b). Frame from Hα film showing use of roll overlay. 37
7(c). Raster tab microfiche. 38
7(d). Raster grey-scale picture microfiche. 39
7(e). Spectral tab microfiche. 39
7(f). Corollary data microfiche for spectral data. 40
7(g). Corollary data microfiche for raster data. 40
8. Hα 1 optical schematic. 49
9. Hα 2 optical schematic. 50
10. Optical characteristics of Hα narrow-band and blocking filters. 51
11. Sample page, Hα Atlas. 52
12. Condensed mission profile. 55
13. Aperture door mechanism. 61
14. Schematic of the high-voltage power supply trip circuit. 65
15. Detector and power supply, cutaway view. 66
16. Data transmission from Skylab to JSC. 73
17. Real-time and quick-look data processing, JSC. 74

List of Figures (cont.)

18. Final data processing, MSFC. 78
19. Final data processing, JSC. 79
20. Tab microfiche. 81
21. Raster tab. 82
22. Line tab. 84
23. Line scan JBAR/COL tab. 86
24. Line scan JBAR/COL plot. 87
25. Line scan CHISQ/COL plot. 89
26. Line scan SQI/LINE plot. 90
27. Spectral scan tab. 92
28. Corollary data tab. 95
29. Grey-scale microfiche. 97
30. Grey-scale raster picture. 98
31. Grey-scale line-scan picture. 100

Figures 3, 4, 6, 17, and 18 were provided by the Ball Brothers Research Corporation; figures 8, 9, and 10, by the Perkin Elmer Corporation; and figures 5 and 11 by the National Aeronautics and Space Administration, Johnson Space Flight Center. All other figures derive from the Harvard College Observatory.

List of Tables

1. Bandpasses and nominal wavelengths of the EUV detectors and solar lines observed in the first and second polychromatic positions. 18

2. Polychromatic combinations, step numbers, and nominal wavelengths for seven EUV detectors observed over the full range of grating positions. 21

1. INTRODUCTION

This handbook provides an introductory overview of the data obtained from the Harvard experiment on the Apollo Telescope Mount (ATM), defines the contents of the data bank produced by the Harvard experiment, and explains how to use them. The handbook is intended primarily for collaborating scientists at Harvard and at other institutions, and for members of the scientific community at large who are already familiar with ATM/Skylab and who participated in program development and mission operations.

This handbook also serves as a cover document to the series of detailed documents listed in section 5; as such, it provides a description of the instruments (section 2), a summary of the development program and the launch and flight phases (section 3), and a description of the data processing systems used by NASA to provide the S055 data (section 4). (S055 is the number used by NASA to identify the Harvard EUV spectroheliometer.)

Throughout the handbook and supporting documents, we use the shortened forms SL 2, SL 3, and SL 4 to refer to the first, second, and third manned Skylab missions respectively. Between SL 2 and SL 3, and between SL 3 and SL 4, there were unmanned intervals during which the S055 experiment continued to operate. SL 1 refers to the launch and flight of the original unmanned Skylab. During the manned missions, the instrument operated in either of two modes: manned, with an astronaut at the control panel; or unattended, with the astronaut crew on board but not at the panel.

To designate time, we have used day of year (DOY) and Greenwich Mean Time (GMT) throughout. The day, month, and year appear in parenthesis as a convenience to the user. The on-board clock and ground-based GMT differ slightly because of errors in the former. Time updates have been used to correct on-board time in the S055 date, the mission logs, and the Hα atlas, but this corrected time can still be inaccurate by up to 0.25 sec. The handling of time in the S055 data is described in more detail in the *Scientific User Tape Guide:*

The development program for the experiment began at the Harvard College Observatory in 1965, and was funded by the Marshall Space Flight Center under contract NAS 5-3949, with Dr. Leo Goldberg as the Principal Investigator. Dr. Edmond M. Reeves became Principal Investigator during the phases of experiment development and mission operations. Dr. Robert W. Noyes became Principal Investigator for the postmission data analysis.

The program now called Skylab was originally part of the Apollo Applications Program. It was conceived as a sequel to the main Apollo program, and would have used Apollo hardware that was left over at the end of the mission to the moon, such as launch vehicles, lunar modules, and command service modules. An early study [1] proposed building a solar-physics payload that would use a modified command and service module (CSM), with the solar telescopes mounted on a deployable platform within the cargo bay of the service module (see section 3.1). Subsequent concepts of ATM combined it with the orbital workshop (OWS), in which a modified lunar module would provide the work station and control panel for the ATM crew. This concept evolved from the

"wet workshop" to the "dry workshop." In the first plan the workshop would be the second stage of a manned Saturn 1B launch vehicle and would be fitted out in orbit. After reaching orbit the second-stage hydrogen tank would be drained, vented, and converted into the workshop by the crew. In the second plan the workshop would be launched by two stages of a Saturn V launch vehicle. The third stage would be fitted out on the ground as the "dry workshop" and would not be needed as a booster. The multiple docking adapter (MDA) and the airlock module (AM), with ATM, comprised the other main components of Skylab as it flew in 1973 (see Figure 1). The crew would be launched separately in a command service module with the first stage of a Saturn 1B launch vehicle (S-1B).

As the Skylab configuration was modified, the Harvard experiments to be flown were also revised to maintain compatibility with the definitions and launch dates of the new program. The original proposal had two UV photoelectric instruments: a short-wave polychromator, 500-1350 Å (S055A); and a long-wave scanning spectrometer, 1400-2250 Å (S055B), plus an Hα telescope equipped with film. The final configuration consisted of the S055 EUV spectroheliometer, and two Hα telescopes to be used as pointing instruments by the crew. One of these, with a film camera, provided a record of ATM pointing throughout the manned Skylab missions.

A calibration rocket program (Calroc) was included as part of the Harvard ATM program when it became evident that the last opportunity to photometrically calibrate the S055 instrument would be 2.5 years before launch. The Calroc instrument updated the ATM calibration by flying a rocket instrument similar in configuration to that flown in each of the three

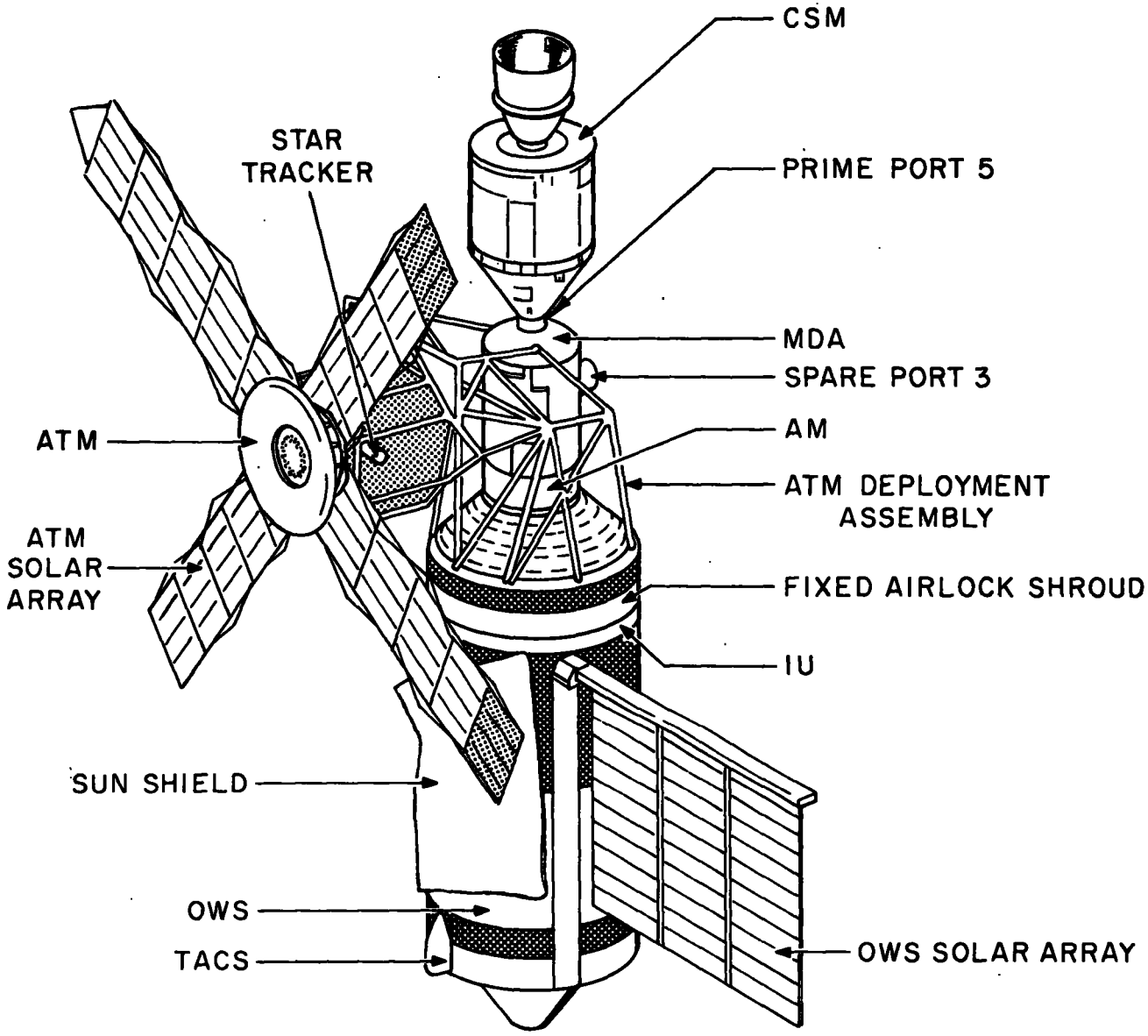

1. Skylab orbital configuration.

manned missions. The rocket payload was photometrically calibrated as late as possible before launch, and as soon as possible after recovery; it observed an area 4 arc sec x 4 arc sec lying within the field of view (5.5 arc sec x 5 arc sec) of the S055 raster in a quiet area on the solar disc, with the sun acting as transfer standard.

Although the first Calroc failed because of an error in orienting the launch tower, the second and third flights (during SL 3 and SL 4 respectively) succeeded in producing updated calibration information as planned.

The primary scientific data flowing from the Harvard experiments are therefore the S055 data, the Calroc data, and the Hα telescope films. These data are stored in the data bank at the Harvard College Observatory (HCO) in Cambridge, Mass., and copies of the primary data items have been submitted to the National Space Science Data Center (NSSDC), Greenbelt, Md., where they are generally available. Engineering data, supporting data, records of operations during the mission, corollary data, and test data are also available at HCO but not at NSSDC. Appendix I lists the primary scientific data that are available at NSSDC and at HCO.

Among the supporting documents, described in section 5, the *Microfiche and Hardcopy Guide* provides detailed information on the use of grey-scale pictures and tabular data (referred to as "tab") from the S055 experiment. The *Scientific User Tape Guide* provides a detailed explanation of formats and the content of the digital scientific data on magnetic tape. The other guides describe some particular kind of data, such as the *Hα Atlas;* still others, such as the *Pointing Reference Handbook*

and the *Calibration Handbook;* give specific background information.

The final scientific data (scientific-user tapes and microfiche) were produced by NASA only after the completion of the Skylab missions. During the mission, however, some data referred to as "quick-look" data were available after every orbit. Quick-look data, with formats slightly different from those of the final data, were obtained in the form of tapes, microfiche, and tabulated output from approximately 15 minutes of every orbit (see section 4), and were normally repeated within the main body of the final scientific data.

The final scientific-user tapes were produced by NASA either from analog range tapes or from all-digital data tape (ADDT). The former were recorded in raw form at the ground stations (remote sites) of the Manned Space Flight Network (MSFN) and stored during the Skylab mission, and contain all the data transmitted to the ground during each pass. The latter, which in principle contain all of the data received at the remote sites, were produced at Johnson Space Center (JSC) in the following manner. Immediately after each pass of Skylab over the remote site, and after the real-time data had been transmitted to JSC, the data on the analog tape were processed and transmitted to the data base at JSC. Data batches, containing 6 hours of data, were read out from the data base onto ADDT tapes, which were then sent to Marshall Space Flight Center (MSFC) for use there in making final data tapes.

The Hα 1 telescope, equipped with both film and video cameras, and the Hα 2 telescope, equipped with a video camera

only, were used by the crew to point ATM and are described more fully in section 3.4. Both telescopes had a reticle in the focal plane which could be adjusted by the crew to coalign the S055 and ATM optical axes (see section 2.3). Operation of the Hα 1 telescope produced five flight films, 16,000 frames each, of which one was from SL 2, two from SL 3, and two from SL 4. Throughout the three missions, solar photographs were taken automatically during manned operations at rates of 1, 2, or 4 frames per minute. Solar photographs could also be taken by the astronaut by shifting from the automatic to the manual mode, in which an exposure was made each time the switch was pressed. The films were brought back by the crew at the end of each mission. Copies of the flight films and an atlas of selected images are available for detailed evaluation of precise ATM pointing. The *Hα Film and Atlas Guide* describes the films and the atlas in detail. In selecting the pictures for the atlas, we usually chose a frame for each significant pointing change, one at orbit sunrise, one at orbit sunset, and at least one for every 15 minutes time. The atlas contains about 50 volumes of 100 pictures each. A page from the atlas is shown in Figure 11.

The on-board Hα films are supplemented by a compilation of ground-based Hα photographs, prepared by the National Oceanographic and Atmospheric Administration (NOAA), covering the period from 15 May 1973 through 18 February 1974. These are available at the HCO data bank in a series of approximately 28 rolls, with 10 days of Hα photographs on each roll. The coverage, from several different observatories, varies from 75.6% in January to 88.4% in September.

In addition to the data received from the experiments, there is a sizable collection of material which was used during the operational phases of the ATM mission. These operational data include the flight plans; solar predictions and reports prepared by NOAA; the console working logs for every orbit prepared by HCO and the engineers of Ball Brothers Research Corporation (BBRC), in the ATM Science Room at the Mission Control Center (MCC), JSC; Skylab voice transcripts; and NASA documentation. As part of the mission planning function, NOAA provided Hα pictures, magnetograms, Ca K photographs, and neutral line diagrams of the sun once or twice per day.

The S055 mission log, also available on tape or as a printout, is a complete orbit-by-orbit listing of all S055 observations recorded throughout the manned, unmanned, and unattended portions of Skylab. The log, described more completely in the *S055 Mission Log Guide*, lists such information as the Joint Observing Program (JOP), Building Block (BB) (section 3.5), instrument mode, pointing coordinates, solar target, the GMT of each observation, quality of the data, tape number, and file. A search routine is available, which the investigator may use to list data and to select portions of the data according to different parameters that have particular characteristics in common, such as JOP, Building Block, or solar target.

Engineering data describing detailed instrument performance are contained primarily in the Compressed User Tapes (CUT), in the form of instrument housekeeping data (voltages and temperatures), systems data, and data from other experiments and from ATM systems. These engineering data were used by BBRC to produce the *ATM Mission Operation Log* (2 June 1975), a record of

all mode changes and exposure times of all ATM experiments. The ATM mission operation log, available on tape or printout, contains a comprehensive list of the times and conditions for the data from all experiments on the ATM, and serves the purpose of directing the data user to possible supporting data in other experiments.

Blank page retained for pagination

2. DESCRIPTION OF INSTRUMENT

2.1 General

The Harvard instrument [2] obtained solar data in photoelectric digital form in the vacuum ultraviolet wavelength range 1350-296 Å, with spatial resolution of 5 arc sec and a spectral purity of from 1.6 to 8 Å, depending on detector and instrument mode. The instrument operated throughout the three Skylab missions in both the manned and unmanned periods. Except for brief interruptions of a few days, the data base covers the period from 1973, day 147 (June 27), to 1974, day 39 (Feb. 8).

The instrument (Figures 2 and 3) consisted of a telescope employing an off-axis paraboloidal mirror, 2.3-m focal length, effective area 184 x 184 mm^2. The mirror substrate was Cer-Vit with a thin iridium coating, gimbal-mounted and servo-driven in two axes to perform either a mirror auto-raster scan (MAR) of an area 5.5 arc min x 5 arc min of the solar disc, or a mirror line scan (MLS) of an area 5.5 arc min x 5 arc sec. Alternatively, the mirror remained fixed and the grating was driven to produce a grating auto-scan (GAS), a wavelength scan in 5497 steps of 0.2 Å each, from 1350-296 Å, in 3.8 minutes. Stop mode refers to the condition in which both the mirror and grating were fixed. In all modes the data were generated at a sampling rate of 24/sec. The instrument observing modes are described in more detail in section 2.2.

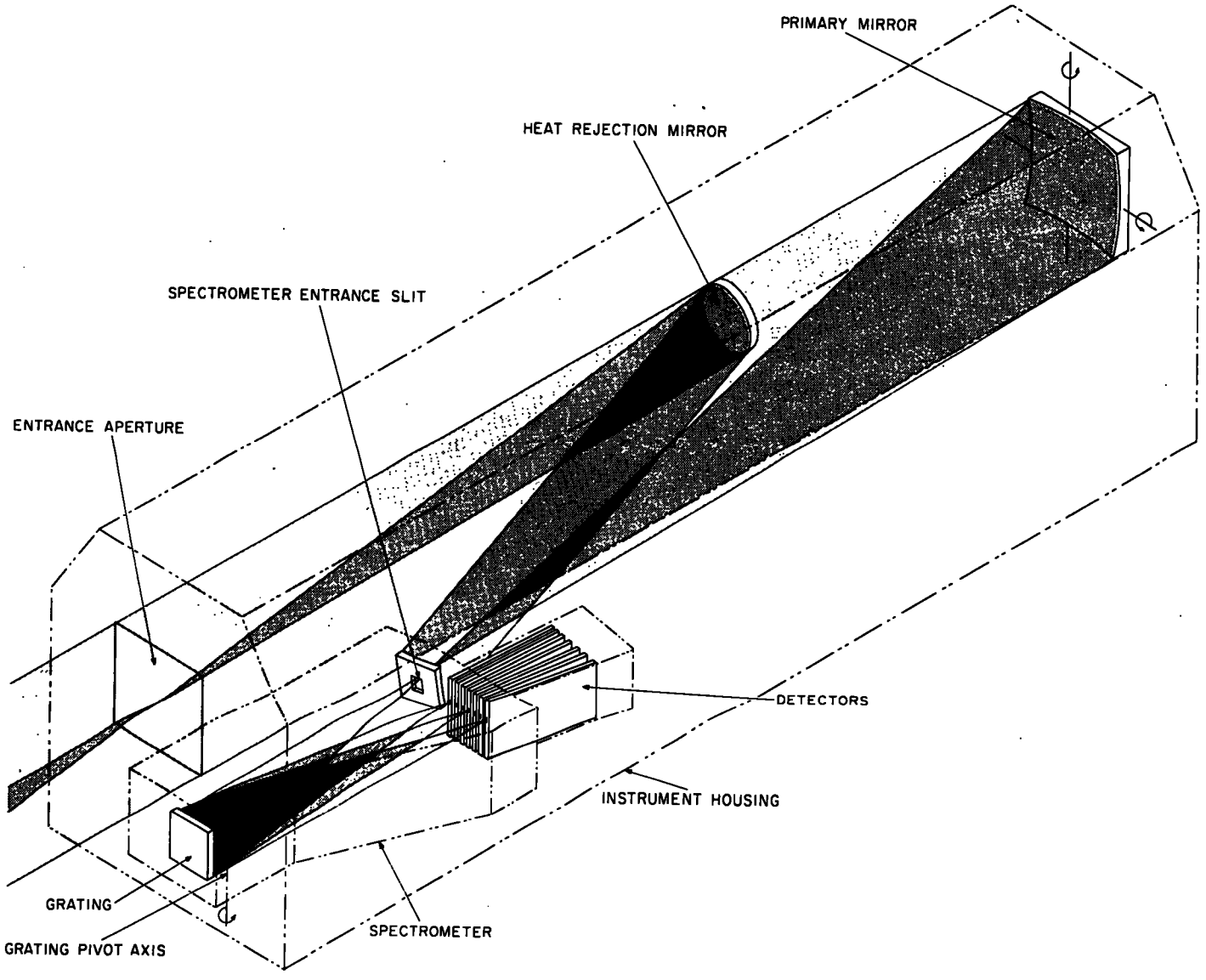

2. Optical schematic of the spectroheliometer.

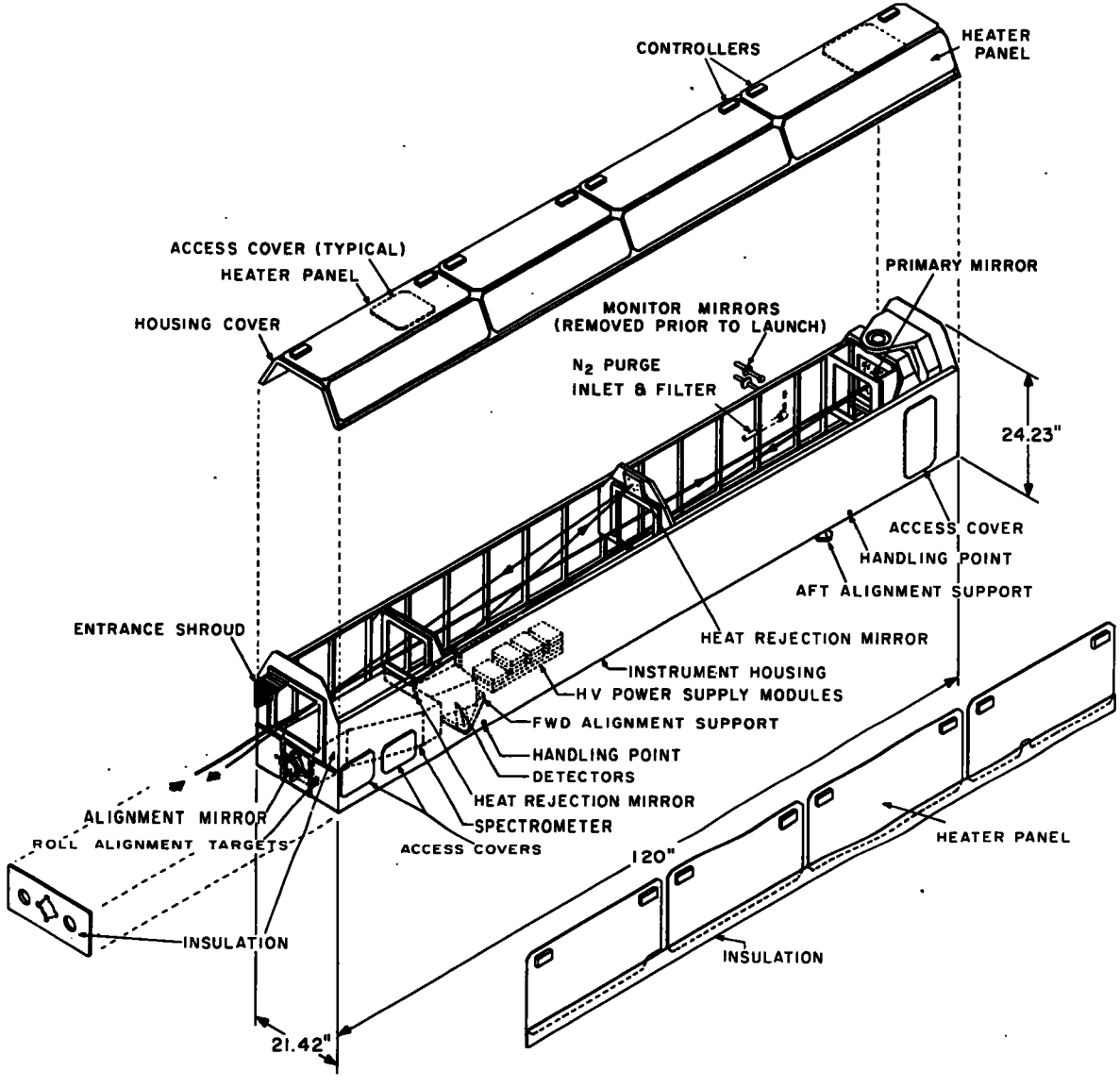

3. Exploded view of the spectroheliometer.

The solar image was formed at the entrance slit of a near-normal-incidence, concave grating spectrometer, whose gold-coated grating was ruled 1800 lines/mm and mounted on a 0.5-m-diameter Rowland Circle, in a modified Johnson-Onaka configuration [3,4] in which the grating and slits were mounted on the Rowland Circle and the grating was rotated about a pivot slightly to one side of its pole. Seven photoelectric detectors were mounted with their slits along the Rowland Circle, at locations chosen to receive the wavelengths in the first polychromatic position, listed in Table 1.

The spectrometer grating was driven by a stepping-motor and cam assembly and had two references (optical and mechanical), which stopped the grating at fixed positions when so commanded. The optical reference used the zero-order light from the grating with a photodiode in four quadrants and a nulling circuit, and stopped the grating at the first polychromatic position (see Table 1). The mechanical reference, consisting of a micro-switch on the drive system, stopped the grating 104 steps ahead of the optical reference. It was used primarily for observations off the solar disc or for setting the grating position during orbital night.

The spectrometer design provided perfect horizontal focus at detector 1 for two grating positions: 450 and 1350 Å. With detector 1 (1.6 Å FWHM), image defocus during the wavelength scan varied from zero to a maximum of 53 μm (0.6 Å) at 950 Å. The other six detectors, with 4 or 8 Å bandpasses, were used primarily in the mirror raster and mirror line scan modes.

Each photomultiplier detector unit (PDU) consisted of a detector module holding a two-stage channel electron multiplier,

with its electronics, and a high-voltage power supply module having outputs of 2.4 and 4.0 kV. The detector electronics transmitted output pulses to the data handling system. One 16-stage counter was used for each detector, although this full range was not available in telemetry. For detectors 1, 3, 4, 5, 6, and 7, stages 1-14 (2^0-2^{13} for a maximum count of 16,383) were used in telemetry. For detector 2, stages 2-14 (2^1-2^{13} for a maximum count of 16,382) were used. The count sent to the intensity data display for detector 1 or 3 on the ATM control and display panel, which was observed by the crew, used all 16 stages (2^0-2^{15} for a maximum count of 65,535). At times during a solar flare the crew reported seeing counts approaching this value. In such instances, the 14 stages that were monitored for telemetry every 0.041 sec filled up and spilled over, so that the count suddenly dropped to a much lower value. For detector 2, viewing H Ly α in the polychromatic mode, the lowest bit of 2^1 rather than 2^0 was chosen because of the relative high intensity of the line. In addition, as noted in Table 1, the detector slit was equipped with an attenuator, which reduced the count by a factor of 25.

The instrument was equipped with an aperture door that opened and closed automatically at orbital sunrise and sunset, an active thermal control system with makeup heaters to maintain instrument temperature at 70°$\pm$ 2°F, and a system of heat-rejection mirrors to dispose of all sunlight other than the portion (5 arc sec square) passing through the spectrometer entrance slit.

2.2 Experiment Observing Modes

During the SL 2, SL 3, and SL 4 manned missions, the experiment was operated by an astronaut at the ATM control

panel during the crew work day (manned), and by ground command from Houston during crew sleep or rest periods (unattended). In the interval between the SL 2 and SL 3 missions, and between the SL 3 and SL 4 missions, when no crewmen were in orbit, the instrument was operated 16 hours per day by remote command from Houston (unmanned).

The prinicpal functional modes were:

2.2.1 Mirror raster scan (MAR and M3R). In the mirror auto-raster (MAR) mode and the mirror three-raster (M3R) mode, the mirror was driven in a raster scan of 60 lines, 5.5 arc min in length and separated by 5 arc sec (see Figure 4). (M3R is the same as MAR except that the mirror stopped automatically at the stow position after the third raster.) The spectrometer grating was stationary and data were obtained simultaneously at as many as 7 wavelengths, as listed in Table 1. A number of additional polychromatic combinations were possible at other grating positions. There are 132 data points on each raster line, representing a spatial sample 5 arc sec high x 7.5 arc sec wide, which is the area that the spectrometer slit swept in the 0.041-sec integration time of the counters. All of the 132 data points are separated from one another by 2.5 arc sec. At the end of each line the turnaround causes the first three data points to be crowded together. Because of this crowding, the data points on odd-numbered lines in each case are slightly misaligned with those on the even-numbered lines, although the data points on all even lines and on all odd lines are exactly aligned. When the grey-scale pictures were generated on microfiche, the first and last 6 data points were discarded, leaving 120 data points arranged symmetrically along each line for a

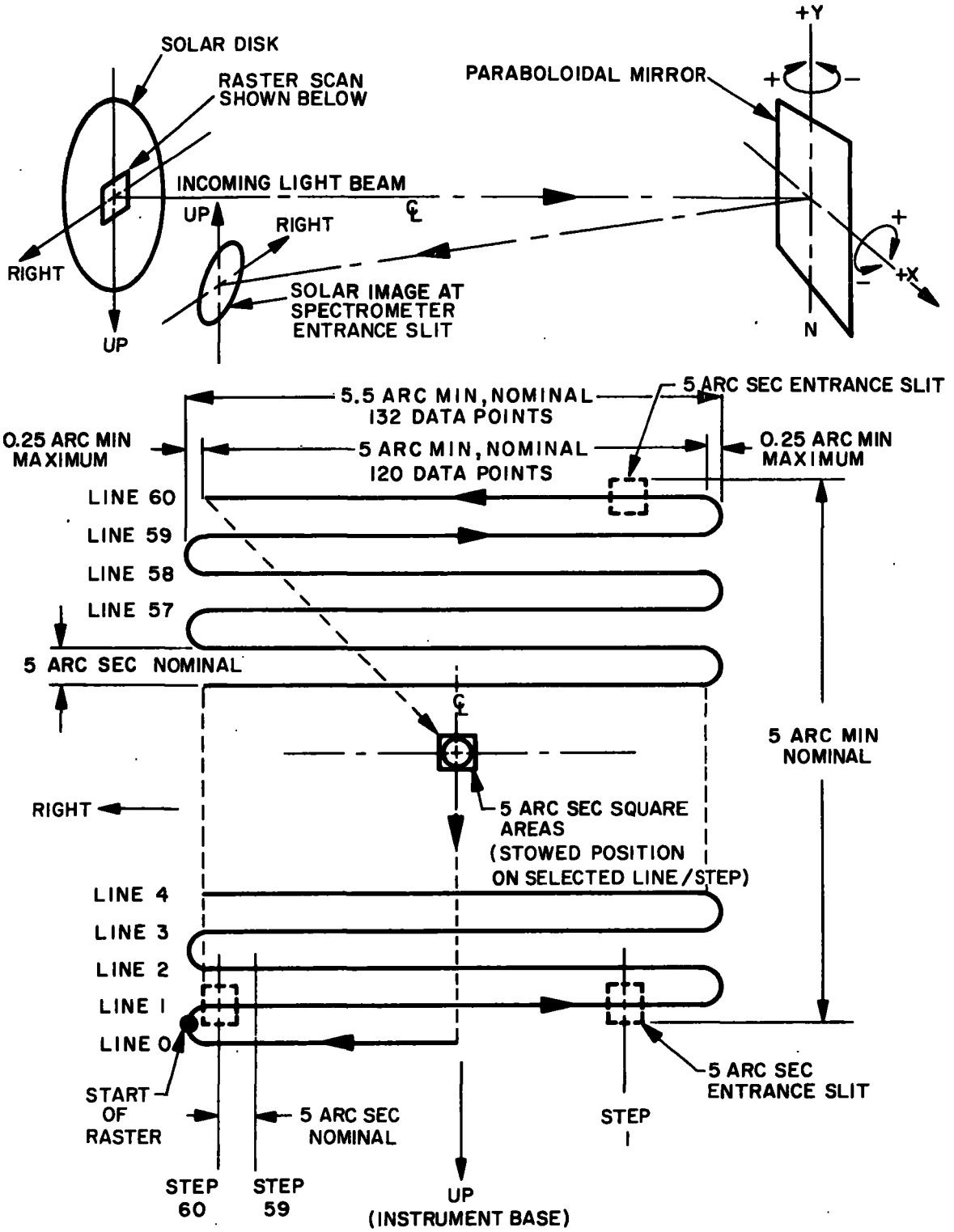

4. Diagram of the primary mirror raster scan.

Table 1. Bandpasses and nominal wavelengths of the EUV detectors and solar lines to be observed in the first and second polychromatic positions.

Detector number	Nominal bandpass (Å)	Nominal location of slit center in first polychromatic position, λ (Å)	Solar line in first polychromatic position, λ (Å)	Solar line in second polychromatic position, λ (Å)
1	1.6	1335.7	C II 1335.7	
2*	8.3	1219.0	H I (Ly α) 1215.7	H I (Ly α) 1215.7
3	4.0	1031.9	O VI 1031.9	H I (Ly β) 1025.7
4	4.0	977.8	C III 977.0	H I (Ly γ) 972.5
5	8.3	896.0	H Ly cont. 896	H Ly cont. 890
6	4.0	625.3	Mg X 625.3	
7	4.0	554.6	O IV 553.3, 554.1, 554.5, 555.3	

*An attenuator mounted in front of exit slit 2 reduces the flux seen by this detector by a factor of 25.

distance of 5 arc min. (Note the ragged edge in the picture, Figure 30, caused by misalignment of adjacent lines.) However, all 132 data points are retained on the SUT. The step numbers along each line, numbered 1 to 60, are the slit positions that the crew could choose for coalignment (while not rastering) by operating a switch on the ATM control and display panel. The capability of stepping along the raster line was employed in 2-limb and 4-limb coalignments, and in miniraster (JOP-1E). The 60 positions along the line are 5 arc sec apart. The nominal center of the raster pattern is at the midpoint of the 132 data points, or halfway between data points 66 and 67. The midpoint of the 60 steps is offset from this pattern by a small amount.

The grating could be positioned automatically at the polychromatic position by the crew or from the ground by commanding it to optical reference. To put the grating at any other position, the astronaut drove it near the desired location and single-stepped the rest of the way, using a display of intensity of detector 1 (or alternatively detector 3) and a display of step number. Thus any wavelength in the range 1350 to 296 Å could be observed with detector 1 and the signal optimized by moving the grating in single steps. In unmanned and unattended operations, the grating was positioned accurately at any step other than the reference by sending ground commands for a set time interval to produce increments of 100, 50, 10, and 1 steps.

As mentioned above, Table 1 lists the wavelengths observed by each detector in the first and second polychromatic positions. The first polychromatic position, with the grating at optical reference, produced the wavelengths at the center of each slit, listed in the third column of the table. As shown in the

second column, the slit widths were wide enough so that the solar lines listed in the fourth column were unambiguously located within the slit but were not centered on the slit. In the second polychromatic position, the grating was moved 28 steps from optical reference, and the solar lines in the last column were located within the slits, but again were not necessarily centered on the slit. Figure 3.23 of the *S055 Experiment Handbook* gives the locations of the line centers relative to slit centers.

In addition to the first and second polychromatic combinations listed in Table 1, there were a large number of additional combinations at grating positions other than optical reference and 28 steps from optical reference. Table 2 lists the most significant combinations for all seven detectors and all grating positions (including optical reference and 28 steps from optical reference). The first two columns of the table list the grating positions from mechanical reference (MR) and from optical reference (OR). The separation between MR and OR is 104 steps (see Figure 5). The key to abbreviations used appears at the head of Table 2.

The symbol !, used in Table 2, indicates that the listed wavelength falls on the indicated detector slit, in spite of scan-to-scan variations in the relation of step-number to wavelength at positions other than optical reference. This anomaly-- the scan-to-scan variations -- was called the "rubber cam effect" and was observed during prelaunch instrument calibration and during the mission. Investigations were undertaken by Ball Brothers [5], Huber [6], and, more recently, by Vernazza [7].

Table 2. Combinations, step numbers, and nominal wavelengths for seven EUV detectors, observed over the full range of grating positions.

KEY TO ABBREVIATIONS
- ! GUARANTEED TO BE ON RESPECTIVE DETECTOR
- * INDICATES THAT LINE IS BLEND OF SEVERAL COMPONENTS
- # INDICATES GRATING POSITION BELONGING TO CALIBRATION SEQUENCE
- C CONTINUUM
- A ALPHA
- B BETA
- D DELTA
- E EPSILON
- G GAMMA
- 2 SECOND ORDER
- W WING
- WAVELENGTH IN PARENTHESIS( ):SENSITIVITY OF INSTRUMENT IS TOO LOW FOR PHOTON COUNTS TO BE RECORDED, SIGNAL DUE TO STRAYLIGHT ONLY
-) INDICATES CONTINUATION TO NEXT LINE

GRATING STEP NUMBER		WAVELENGTH OF SOLAR EMISSION LINE DETECTOR NUMBER													
MR	OR	1		2		3		4		5		6		7	
0104	0000#	CII	1335.7!	HILA	1215.7!	OVI	1031.9!	CIII	977.0!	HLC	896 !	MGX	625.3!	OIV	554.4!*
0111	0007	CII	1334.5!	HILA	1215.7!	OVI	1031.9!	CIII	977.0!	HLC	895 !	MGX	625.3!	OIV	554.4 *
0132	0028	CI	1329.1	HILA	1215.7!	HILB	1025.7!	HILG	972.5!	HLC	890 !		621	ALXI	550.0 *
0184	0080		1319		1202		1016		961	HLC	880	MGX	609.9!	HEI	537.0!*
0189	0085	C	1318 !		1201		1015		960				609	HEI	537.0 *
0232	0128	SIII	1309.3	SIII	1190.4!		1006		951	HLC	870 !	OIII	599.6!	OIII	525.8 *
0232	0128)			SIII	1194.1!										
0238	0134		1308	SIII	1190.4!		1004	HILD	949.7!	HLC	867 !	OIII	599.6	OIII	525.8!*
0238	0134)			SIII	1194.1!										
0250	0146	OI	1305 *		1188		1002		947	HLC	866 !		596	OIII	525.8 *
0266	0162#	OI	1302.2		1185	SIXII	(2)998.6!	SVI	944.5!	HLC	863 !		592	SIXII	521.1!*
0304	0200#		1294	CIII	1175.7!*	NIII	991.0!	HILE	937.8	HLC	853 !	HEI	584.3!		512 *
0327	0223	OII2	1288.4	CIII	1175.7 *		986		931	HLC	849 !	OII	580.4!		507 *
0367	0263		1280		1164	CIII	977.0!	NIV	923.1!	HLC	841 !	NEV	572.3	SIXII	499.3!*

0500	0396		1252			1134	HLD	949.7!	HLC	896	!	HLC	813	!		543	HEC	471	*
0506	0402		1251			1134	HLD	949.7	HLC	894	!	HLC	811	!	NEIV	542.8!	NEIV	469.8!	*
0530	0426#		1246			1129	SVI	944.5!	HLC	888	!	HLC	806	!	HEI	537.0!	NEVII	465.2!	*
0533	0429	C	1245	!		1129		942	HLC	887	!				HEI	537.0!	NEVII	465.2	*
0551	0442	NV	1242.8			1126		939	HLC	885	!					533		462	*
0551	0442)	FEXII	1242.2																*
0554	0455		1240			1123		937.	HLC	882	!					531		459	*
0570	0462	NV	1238.8			1122		935	HLC	881	!					529		457	*
0586	0482	C	1234	!		1117		931	HLC	876	!					525		453	*
0605	0501	C	1230	!		1113		927	HLC	872	!					521		449	*
0621	0517	HILA	W1227	!	OIV2	1108.8		924	HLC	870	!					518		446	*
0632	0528	HILA	W1224	!	OIV2	1108.8		921	HLC	867	!					515		444	*
0646	0542	HILA	W1221	!	OIV2	1108.8		918	HLC	864	!					512		441	*
0698	0594	HILA	W1210.4!			1093	HLC	907	! HLC	853	!	NEVIII	770.4!		HEC	503	! MGVIII	430.5!	
0705	0601	HILA	W1209	!		1092		906		851					SIXII	499.3		428	*
0724	0617#	SIIII	1206.5			1089	CII	904.2!	HLC	848	!	NEVIII	770.4			497	HEC	425	*
0724	0617)						HLC	903	!			NIII	764.6						*
0724	0617)											NIV	764.6						*
0737	0630		1203			1086	HLC	900	!	845					HEC	494	! HEC	422	*
0757	0653	NI	1199.9		NII	1085.1!	HLC	895	! HLC	840	!	OV	760.4!		HEC	489		418	*
0768	0664		1196		NII	1085.1	HLC	893	! HLC	838	!	OV	760.4!		HEC	487	SXIV	417.6	*
0768	0664)																FEXV	417.6!	
0800	0696	SIII	1190.4		SIII	1077.1!	HLC	886	! OII	834		HLC	750		NEV	482.1 *		450	*
0800	0696)				HEI2	1074.2!			OIII	834									*
0800	0696)								HLC	832									*
0820	0716	C	1186	!		1068	HLC	882	! HLC	827						476		405	*
0841	0737	C	1181	!		1064	HLC	877	! HLC	823	!					471	NEVI	410.7!	*
0870	0766	CIII	1175.7 *			1057	HLC	871	! HLC	818	!	HLC	736		NEVII	465.2		394	*
0870	0766)											MGIX 2	368.1						
0876	0772		1174			1056	HLC	870	! HLC	815	!	HLC	735		NEVII	465.2!		393	*
0967	0863	C	1154	!		1037	HLC	851	! HLC	796						445		374	

0995	0891		1148	OVI	1031.9!	HCL	845	!	OIV	790.2!				439	MGIX	368.1!	*
1013	0909	NEV 2	889.2	OVI	1031.9	HCL	841	!	OIV	787.7!			NEVI	436.1!		364	
1013	0909)			HLB	1025.7												
1028	0924		1141	HLB	1025.7!	HLC	838	!		784	OIII	703.4!	MGVIII	436.1	FEXVI	360.8!	*
1028	0924)												NEVI	436.1			
1028	0924)												MGVIII	430.5			
1039	0935	NEV 2	1139.6	HILB	1025.7!	OII	834		NEVIII	780.3	OIII	703.4!*	MGVIII	430.5		359	*
1039	0935					OIII	834										
1049	0945	NEV 2	1136.8		1020	OII	834	!	NEVIII	780.3!	HLC	698		428		357	
1049	0945)					OIII	834										
1091	0987	SIIV	1128.3*		1011	HLC	825	!	NEVIII	770.4!				419		348	
1146	1042	NEVI 2	1117.2	SIX112	998.6!	HLC	813	!	OV	760.4 *				407	FEXVI	335.4!	
1184	1080	OIV 2	1108.8!*	NIII	991.0!	HLC	805	!*		751			NEVI	401.7		329	*
1213	1109	CC	1102 !		985	HLC	799	!		745				393		323	*
1232	1128	CC	1098		981	HLC	795			741				389		319	*
1259	1153	CC	1094 !	CIII	977.0!	OIV	790.2		MGIX 2	736.2!	HLC	653		384		313	*
1273	1169	CC	1090 !		973	OIV	787.7			732				381		309	*
1304	1200#	NII	1085.1		966	NEVIII	780.3!			726				374	HEII	303.8!	*
1339	1233		1075		959		773		OII	718.5!			MGIX	368.1!		297	*
1371	1267		1068		952	NIII	764.6!			712	OV	629.7!	FEXVI	361.7!*		290	*
1371	1267)					NIV	764.6!										*
1380	1276		1066		950	NIII	764.6!			710				358		288	*
1380	1276)					NIV	764.6!										
1396	1292		1063	HILD	949.7!	OV	760.4			706	OV	629.7		355	FEXV	284.3!	*
1415	1311		1059		943		757		OIII	703.4!	MGX	625.3!		351		(280)	*
1466	1362	C	1049 !		932		746			692				340		(270)	*
1485	1381	C	1045 !		928		742			688				366 !		(266)	*
1488	1387		1043		927		741			686	MGX	609.8		335		(265)	*
1499	1395		1041		925		739		NIII	685.7!			FEXVI	335.4!		(263)	*
1527	1423#	OVI	1037.6	NIV	923.1	MGIX 2	736.2!		NAIX	681.7	OIII	599.6		327		(257)	*
1585	1481	HLB	1025.7	HLC	906 !		721			667	HEI	584.3!		315		(245)	*

1605	1501		1019		HLC	903	!	OII	718.5!		663					311	(241)	*
1605	1501)				CII	904.1!												
1646	1542	C	1011	!	HLC	894	!		708		654				HEII	303.8!	(232)	*
1650	1546		1010		HLC	893	!		707		653				HEII	303.8	(231)	*
1691	1587	C	1001	!	HLC	884	!		699		645					293	(223)	*
1719	1615		995		HLC	879	!	NAIX	694.2!		639					287	(217)	*
1742	1636	NIII	991.0		HLC	874	!		688		634	V	554.0!		FEXV	284.3!	(213)	*
1758	1654		987		HLC	870	!	NII	685.7!	OV	629.7!					(279)	(209)	*
1763	1659	C	986	!	HLC	869	!		683	OV	629.7!					(278)	(208)	*
1777	1673	C	983	!	HLC	866		NAIX	681.7!		626					(275)	(205)	*
1850	1746	C	968	!	HLC	851	!		665		611					(259)	(190)	*
1857	1753		966		HLC	849	!		664	MGIX	609.8!	OIII	525.8!			(258)	(188)	*
1975	1876		940		HLC	824	!	CAVII	639.2!	HEI	584.3!	SIXII	499.3!			(232)	(162)	*
1975	1876)											HEC	499	!				
2019	1915	SVI	933.4		HLC	815	!	OV	629.7!		576	HEC	492	!		(224)	(154)	*
2045	1941		926		HLC	809	!	MGX	625.3!	NEV	569.8!	HEC	489	!		(218)	(149)	*
2045	1941)									NEV	592.3!							
2079	1975		919		HLC	802	!	OII	616.6!	NEVI	562.8!					(211)	(142)	*
2119	2015		911			794		MGX	609.8	OIV	554.4!*					(203)	(133)	*
2160	2056	HLC	902		OIV	790.2!		OIII	599.6!	NEIV	542.8	NEVII	465.2!			(194)	(125)	*
2160	2056)				OIV	787.7!												
2167	2063	HLC	9001			784		OIII	599.6!	NEIV	542.8!	NEVII	465.2!			(193)	(123)	*
2239	2135	HLC	885	!	NEVIII	770.4		HEI	584.3!		530					(178)	(108)	*
2258	2154	HLC	881	!	NEVIII	770.4		OII	580.4!*	OIII	525.8!	SXIV	445.7			(174)	(104)	*
2381	2277	HLC	885	!		739		OIV	554.4!*	SIXII	499.3!	FEXV	417.3!			(148)	OFF	*
2460	2356	HLC	838	!		722		HEI	537.0!	NEV	482.1!*	NEVI	401.7!*			(131)	OFF	*
2540	2436	HLC	822			705		SIXLL	521.1!	NEVII	465.2!					(114)	OFF	*
2604	2500	HLC	808			692			506	HEC	453					OFF	OFF	*
2637	2534	HLC	801			685		SIXII	499.3!		446	FEXVI	361.7!*			OFF	OFF	*
2657	2553	HLC	797			681		HEC	494	!	442					OFF	OFF	*
2752	2648	HLC	777			661		HEC	475	!						OFF	OFF	*
2769	2665#	HLC	773		SIV	657.3!		NEIV	469.8	FEXV	417.0!	FEXVI	335.4!			OFF	OFF	*

2769	2665			SIV	661.4						OFF	OFF	*
2798	2694	HLC	767		651	NEVII	465.2!	NAVIII	411.6		OFF	OFF	*
2798	2694							CRXIV	411.6		OFF	OFF	*
3001	2897#		724	MGX	609.8!		423	MGIX	368.1!	FEXV 284.2!	OFF	OFF	*
3030	2926	OII	718.5	OIII	599.6!	FEXV	417.3!	FEXVI	361.7!	FEXV 284.2	OFF	OFF	*
3030	2926)					SXIV	417				OFF	OFF	*
3103	2997#	OIII	703.4*	HEI	584.3!	NEVI	401.7!		349		OFF	OFF	*
3303	3199				545		360	HEII	303.8!		OFF	OFF	*
3561	3455		606		490	HEII	303.8!		(253)		OFF	OFF	*
4061	3957	HEC	501 !		385		(200)		(147)		OFF	OFF	*
4099	3995	HEC	492.5!		377		(192)		(139)	OFF	OFF	OFF	*
4125	4021	HEC	487 !		371		(187)		(134)	OFF	OFF	OFF	*

Ball Brothers made tests and studies using the flight spare spectrometer, which exhibited the same anomaly. They concluded that variations, which have a magnitude of ± 1 to ± 5 steps, resulted from a bent shaft in the gear train of the grating drive. This particular shaft rotated 5.875 times in 1 complete scan. Over 8 scans, this shaft therefore had an integral number (47) of revolutions. Hence expected to have 8 wavelength scans, each with its own individual characteristics, repeating themselves continuously throughout the mission.

In Huber's investigations, statistical data were gathered, from the flight instrument each day during the mission, and were analyzed from wavelength scans of detectors 1 and 2, with the computer program for UV profile analysis (PROAT). In addition, data from all detectors were gathered during Calroc and calibration sequences with the procedures of JOP 12F, Building Block 26. The existence of an 8-scan period was verified, and a procedure for correcting variations in the correspondence of step number to wavelength was developed.

Vernazza's investigations, which are continuing, use the final data and have verified the existence of an 8-scan periodicity, although a 17-scan periodicity provides a slightly better fit. Evidence has also been found of variations in the location of optical reference. A modified approach to correcting for the anomaly has been developed and compared with Huber's method.

The exit slit widths of the individual detectors varied from 1.6 Å (144 μm) for detector 1, to 4.0 Å (360 μm) for detectors 3, 4, 6, and 7, and to 8.0 Å (750 μm) for detectors 2 and 5. Since the nominal position of the line center usually does not fall at the center of the exit slit, there are some

cases (not marked !) in which the variation in the correspondence of stepnumber to wavelength, although small with respect to the width of the slit, is significant and could cause the line to fall outside if the nominal position is near the edge of the slit. There are other cases in which the line always falls within the slit area, regardless of variations in the correspondence of stepnumber to wavelength. These cases are marked !

MAR and M3R were the principal mirror raster modes. However, additional modes, variations of MAR and M3R and less frequently used, are MINI-MAR (JOP IE), maxi-raster (JOP 25A), and super-raster (JOP 25B). (See section 3.5 for a description of Building Block and Joint Observing Programs.)

MINI-MAR is either a manually constructed raster as in JOP IE, or a truncated raster.

Maxi-raster comprises four rasters, performed in sequence. After each raster the ATM pointing is changed by 270 arc sec to produce a square pattern of four rasters whose centers describe a square 270 arc sec x 270 arc sec.

Super-raster comprises a series of 45 rasters covering the entire solar disc. Their centers are separated by 290 arc sec.

2.2.2 Mirror line scan. The raster scan mode (MAR) is not suitable for some solar features such as flares, whose structure changes on a time scale of seconds, because a complete raster requires 5.5 minutes of time. The experiment was therefore provided with an alternative mode, the mirror line scan

(MLS), in which the mirror scans back and forth on one of the 60 lines in the raster pattern. Any raster line could be chosen by the astronaut, a one-dimensional scan being obtained of an area 5.5 arc min long by 5 arc sec side, every 5.5 sec of time, with 132 data points in each scan.

Mirror line scan of a solar feature was normally performed on the coalignment line (8, 9, or 10), determined from the last 2-limb or 4-limb coalignment (see *Pointing Reference Handbook*, section II). The SO82B slit and the Hα 1 reticles were aligned with this position. However, the position being near the edge of the raster, at times it was preferable to perform MLS on line 25, in order to obtain EUV images more nearly centered on the specific region for which wavelength scans were obtained. The Hα 2 reticles were aligned with this position and were used for pointing. This arrangement represented a compromise, since the center of the SO55 raster, line 30, would be at the edge of the Hα 2 field of view when zoomed in. (For a description of the Hα telescopes, see sections 3.4 and the *Hα Film and Atlas Guide.*)

2.2.3. Grating wavelength scan. In the grating scan mode (GAS and G3S) (see Figure 5) the telescope mirror remains stationary at one of the 60 lines and one of the 60 steps along the line, while the grating scans the EUV spectrum from 1350 to 296 Å in 3.8 minutes of time, including retrace. Normally, as with MLS (see above), the mirror was in the coaligned position. Sometimes, however, it was moved to line 25. With samples 0.2 Å apart and a rate of 24 steps per sec, the useful part of the scan consists of 5270 data points in 3.6 minutes of time at a rate of 4.9 Å/sec. During a Calroc flight or a calibration sequence, BB26 of JOP 12 was run, and GAS was performed with

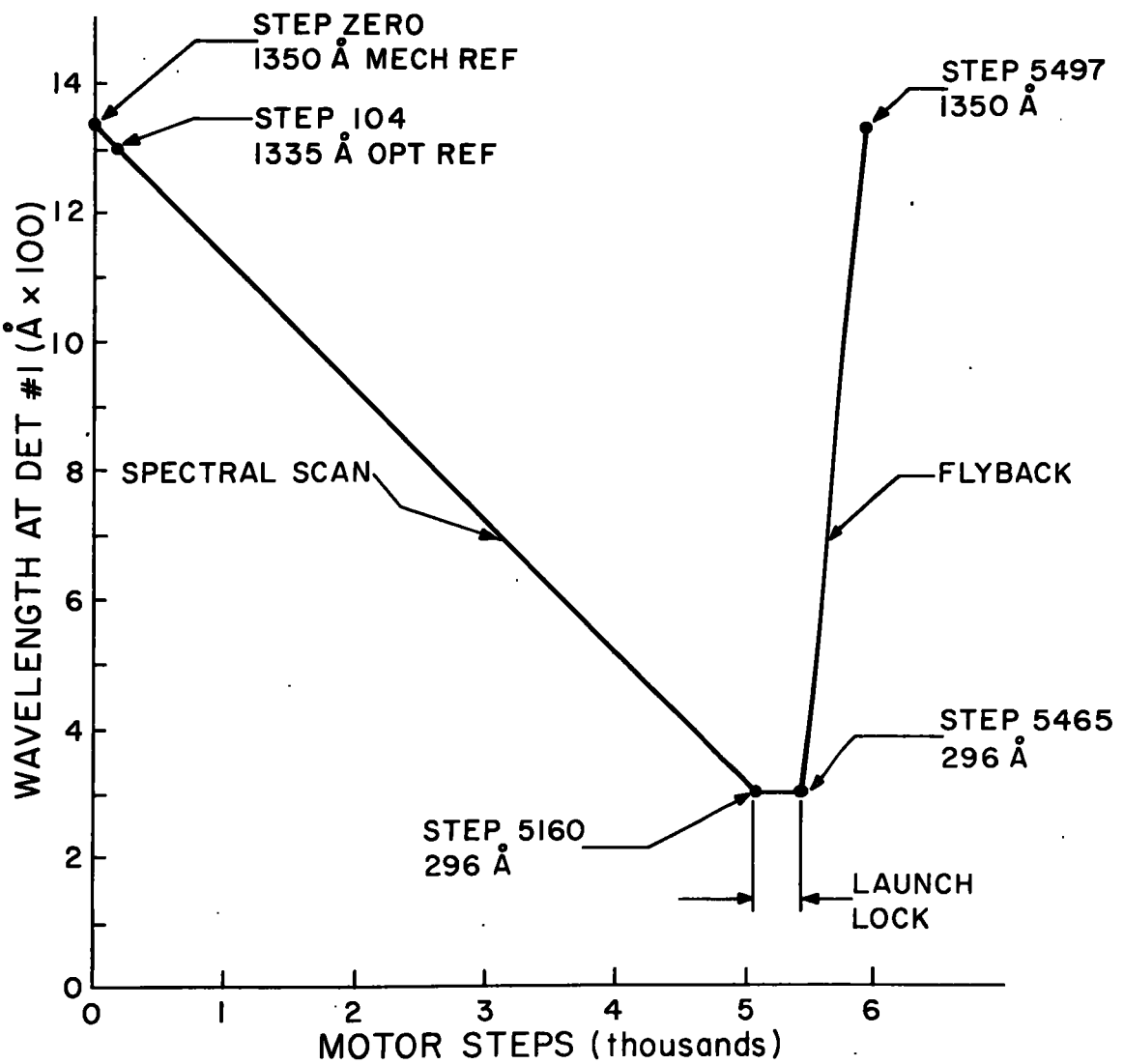

5. Diagram of the grating wavelength scan, showing locations of mechanical and optical reference, the spectral scan portion, the launch lock, and flyback.

all detectors on initially. Detectors 7 through 3 were then turned off during the scan by the astronaut at predetermined grating positions to prevent the intense zero-order image from striking the detector and possibly affecting its lifetime or calibration. In all other spectral scans only detector 1 (because of its narrow slit and optimum location on the Rowland Circle) was normally turned on, although detector 2 was also occasionally turned on in late stages of the mission, since the zero-order image does not go beyond detector 3.

2.3 Experiment Pointing

This section briefly describes the ATM pointing coordinate system and coalignment procedures. For a fuller explanation, consult the *Pointing Reference Handbook*, and *Hα Film and Atlas Guide*, described in section 5.

Figure 6 represents a diagram of the ATM pointing coordinates superimposed on the solar disc. The ATM roll angle, γRR, normally expressed in minutes, is measured from solar north. The clockwise direction is positive. Changes in γRR are accomplished by a physical rotation of the ATM canister, which is mounted in a roll ring. The drive has a ring gear, pinion, and motor. The roll motion covers a range of 240°.

The two-axis gimbal of the ATM canister was mounted within the roll ring, and therefore rotated whenever the roll ring rotated. The axis of rotation of the roll ring passed through the center of the solar disc. If ATM pointing was not sun-centered, the ATM pointing axis was at an angle to the roll axis, and the ATM pointing axis therefore described an arc on the solar disc as the roll angle changed. To correct for changes in up/down and left/right during changes in roll, the

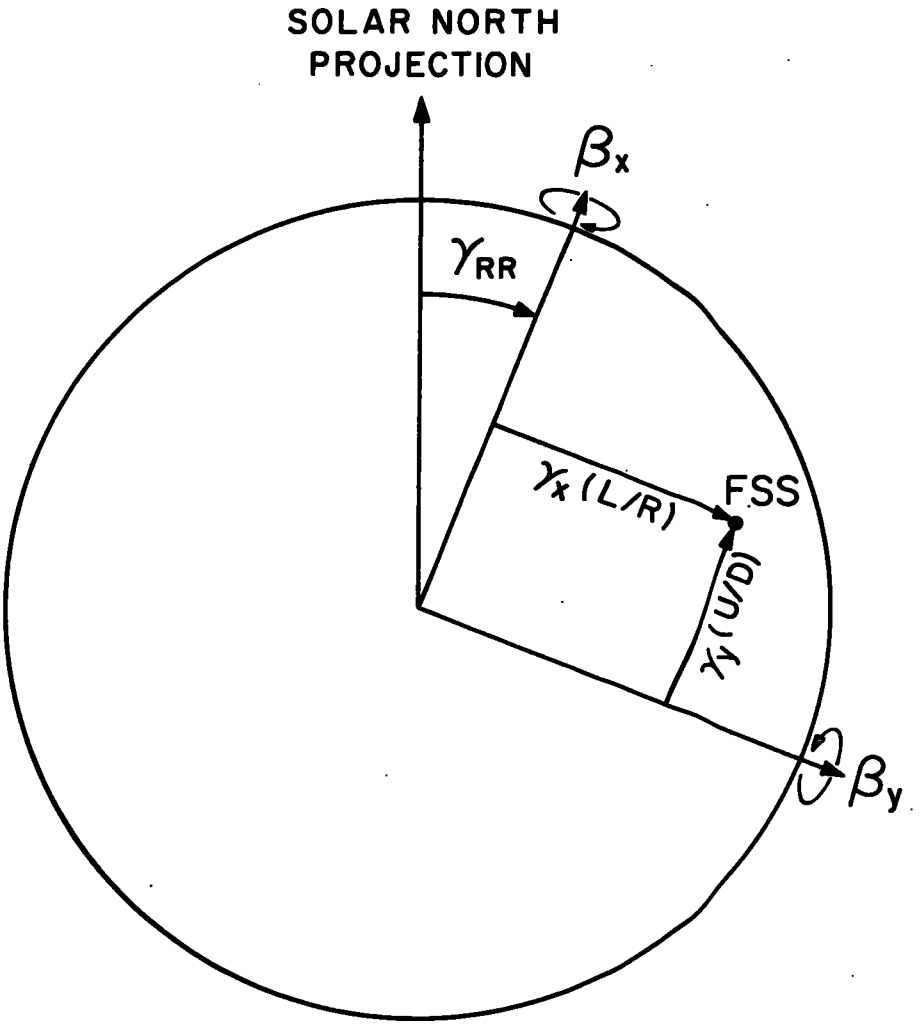

6. Diagram of ATM pointing coordinate system. Rotation of the canister about β_y produces a change in γ_y; rotation about β_x produces a change in γ_x.

ATMDC was programmed to automatically adjust γ_x and γ_y, in order to permit roll motions about offset positions.

The ATM canister, mounted within the roll ring on a two-axis gimbal, was rotated about two perpendicular axes by torque motors to produce changes in γ_x and γ_y. The two rotation axes illustrated in Figure 6 are β_x and β_y. Rotations about β_x and β_y produce, respectively, changes in γ_x and γ_y. γ_x, referred to as left/right (L/R), and γ_y, referred to as up/down (U/D), were measured in arc sec. The positive directions are up and to the right. The range of offset is $\pm$ 24 arc min ($\pm$1440 arc sec) in both directions.

The values of γ_{RR} appearing in telemetry were calculated by the on-board computer, using measured roll encoder positions and data from an on-board star tracker. During the manned Skylab missions, star-tracker updates were executed by the crew every few hours and the telemetered γ_{RR} values are quite reliable. Between star-tracker updates, errors in the transmitted γ_{RR} were introduced by gyro drift and roll maneuvers, such as momentum dumps at orbit midnight. During unmanned observations, and after the failure of the star-tracker on day 361 (27 Dec. 1973), star-tracker updates were not possible and large errors are present in the telemetered value of γ_{RR}. IBM has recalculated the roll positions and has distributed a listing of "reconstructed γ_{RR}" for the three manned missions, and a series of curves for the unmanned intervals, which may be used to correct the telemetered values of γ_{RR} appearing in the S055 data.

The values of γ_x and γ_y appearing in telemetry were determined from encoders attached to the deviation wedges in the fine sun sensor (FSS). The fine sun sensor was a nulling device

which sought sun center, and was biased by motion of the wedges to produce an offset-pointing error signal. The error signal was used in the closed-loop servo system that controled the DC torque motors on the two axes (β_x and β_y) of motion of the ATM canister. To determine the pointing of the optical axis of the S055 instrument from γ_x and γ_y, the offset of S055 from the FSS must be known. The offset was in two parts: the offset between S055 and S082B; and the offset (bias) between S082B and the FSS.

The offset between S055 and S082B was determined by the offset of the S055 slit from the coaligned position in the S055 raster, which was determined in the last 2-limb or 4-limb coalignment. If the S055 slit was at some position in the raster other than the coaligned position, that distance was the offset from S082B.

The offset between S082B and the FSS was given by the values of NRL BIAS appearing in telemetry. With BIAS IN, the γ_x and γ_y appearing to the crew (but not in the telemetry) have been corrected by the amount of the NRL biases by subtracting the NRL up/down and left/right biases. With BIAS OUT, the γ_x and γ_y appearing to the crew (and in telemetry) are the raw values of the FSS wedge positions.

The 2-and 4-limb coalignments were performed by the crew at intervals throughout the mission to determine the NRL biases, determine the location in the S055 raster that best aligned the S055 slit with the S082B slit, and set the Hα 1 reticles at this position. In the 4-limb coalignment procedure, the astronaut placed the S082B slit at the limb, using the S082B slit white-light display on one monitor, the Hα 1 display on the other. The FSS readings were entered into the ATM digital computer (ATMDC) to determine the NRL biases. The Hα 1 reticle

was set at the limb, and the S055 mirror was stepped from line to line (or along the line) while the signal was observed from the zero-order detector (with the grating at optical reference) that indicated when the limb was crossed. At this point the ATM pointing control was used to slew the pointing on and off the limb to find a more precise location of the S055 slit at the limb, since the 5 x 5 arc/sec slit could be moved only in 5 arc sec increments in the raster pattern. This last position was then used to calculate the precise S055 offsets from the Hα reticles and the S082B slit. The position (line and step) in the raster pattern is called the coalignment position and is the position at which the mirror stowed when not rastering or line scanning.

The 4-limb coalignment was repeated at four limbs, 90° apart. The 2-limb coalignment was performed at only two limbs, did not measure the S082B biases, and did not slew the ATM pointing on and off the limb to refine the position of the S055 slit. The 2-limb coalignment was therefore a simpler procedure for measuring changes between S055, S082B, and Hα, but not between these instruments and the FSS.

In Figure 7 we have presented a composite to illustrate how the pointing information can be used to relate an element in the raster data to the spectral microfiche data, and to the location in the Hα atlas photograph.

The figure uses data on DOY 230 (25 August 1973). At 18:55:37 GMT raster data were taken. Without a change in the pointing, spectra were taken at 19:02:15 following the raster. The series of illustrations shown in the composite is repeated on a larger scale individually in Figures 7(a) through 7(g).

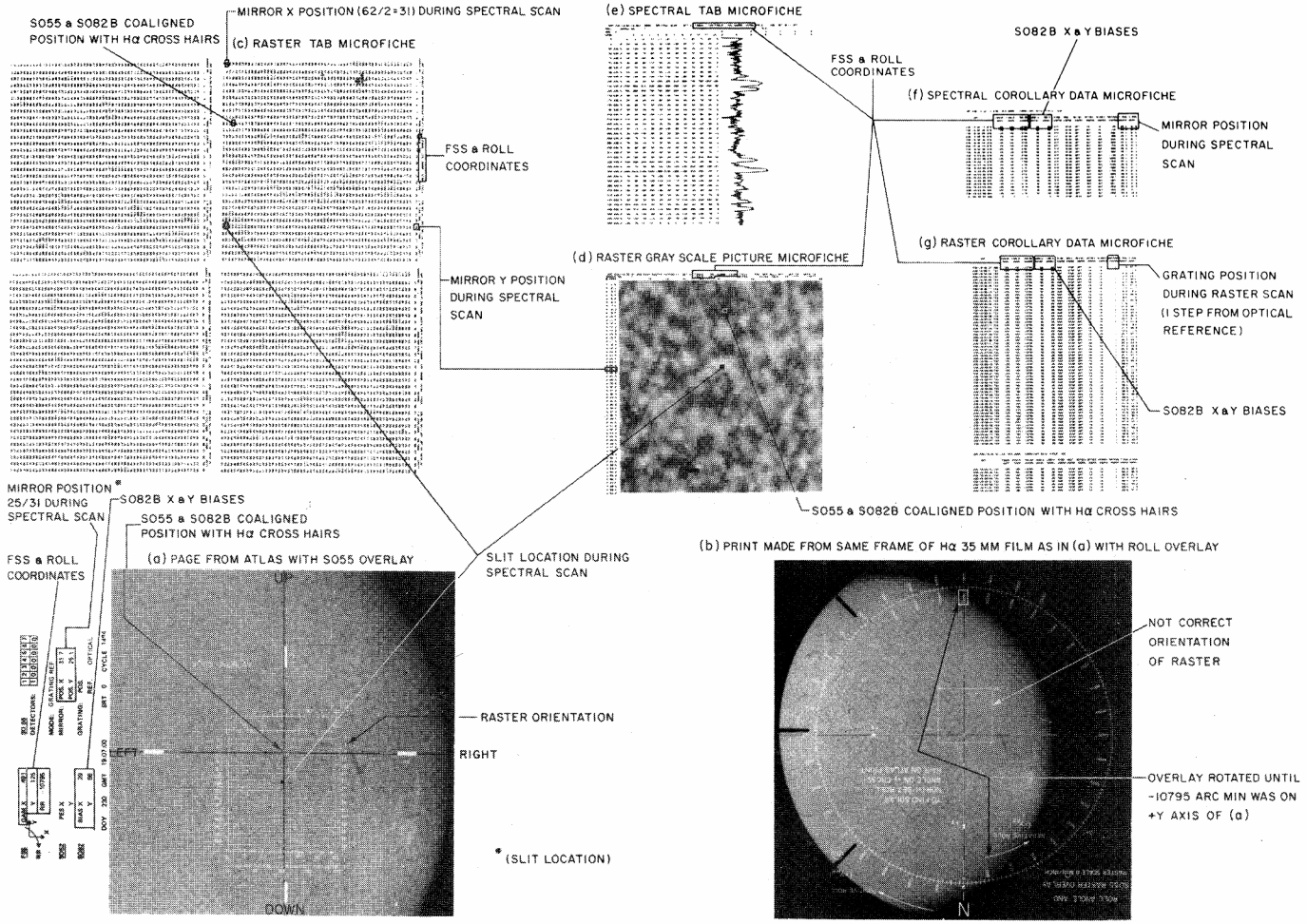

7. Composite of Hα pictures [(a) and (b), raster tab (c), raster grey-scale picture (d), spectral tab (e), and corollary data (f) and (g).] (a) A page from the Hα atlas with the S055 overlay superimposed; (b) A print of the same frame as (a), but enlarged to include the entire frame, with the roll overlay superimposed; (c) The raster tab and (d) the grey-scale picture, of the area within the raster in (a); (e) The beginning portion of the spectral tab; (f) and (g), respectively, the spectral and raster corollary data. The S055 and S082B coaligned position at the intersection of the Hα 1 reticle at line 9, position 32, and the S055 slit location at line 25, position 31, during the spectral scan are shown in (a), (b) and (c).

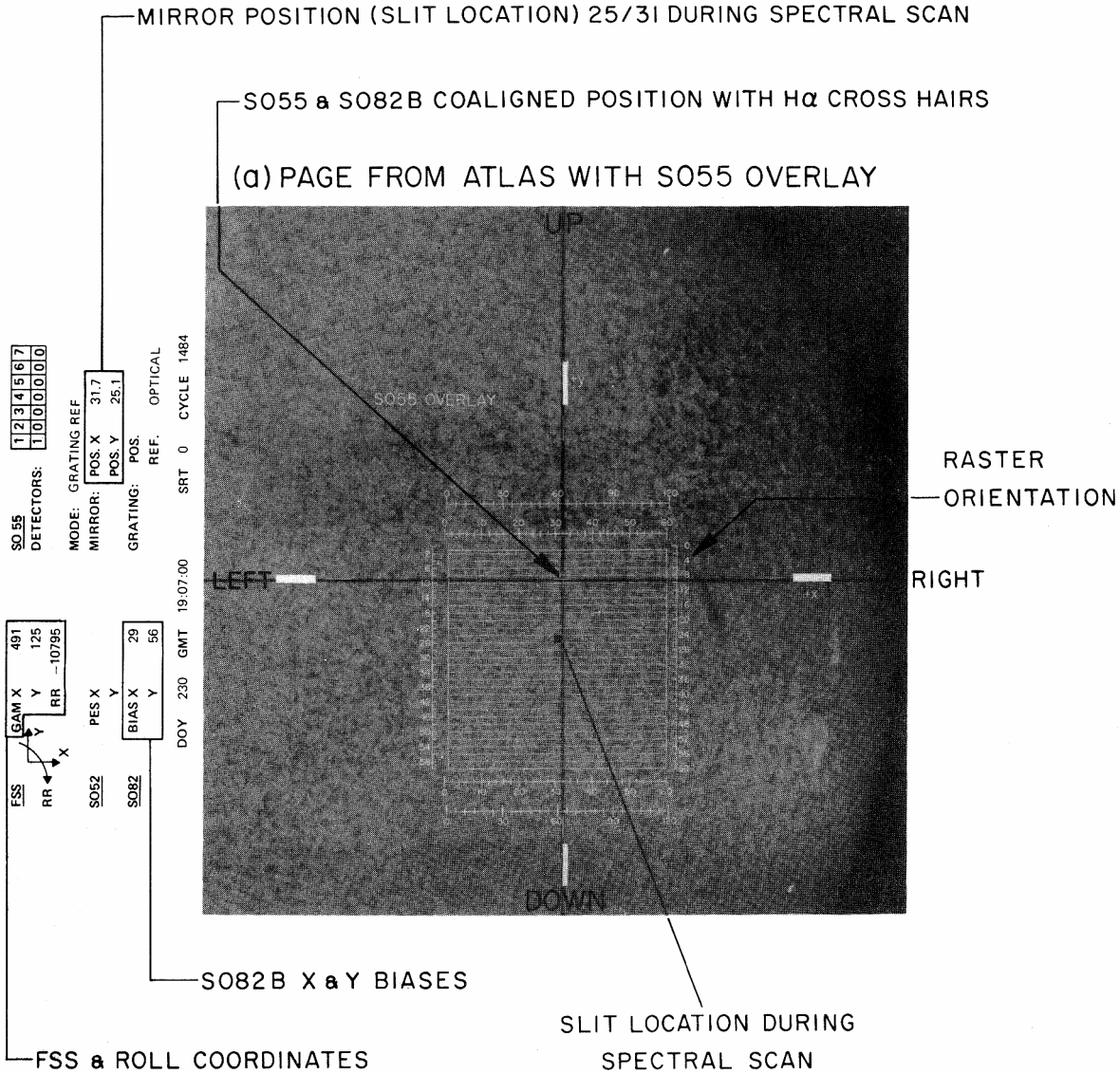

7(a). Page from Hα atlas showing use of S055 overlay.

(b) PRINT MADE FROM SAME FRAME OF Hα
35 MM FILM AS IN (a) WITH ROLL OVERLAY

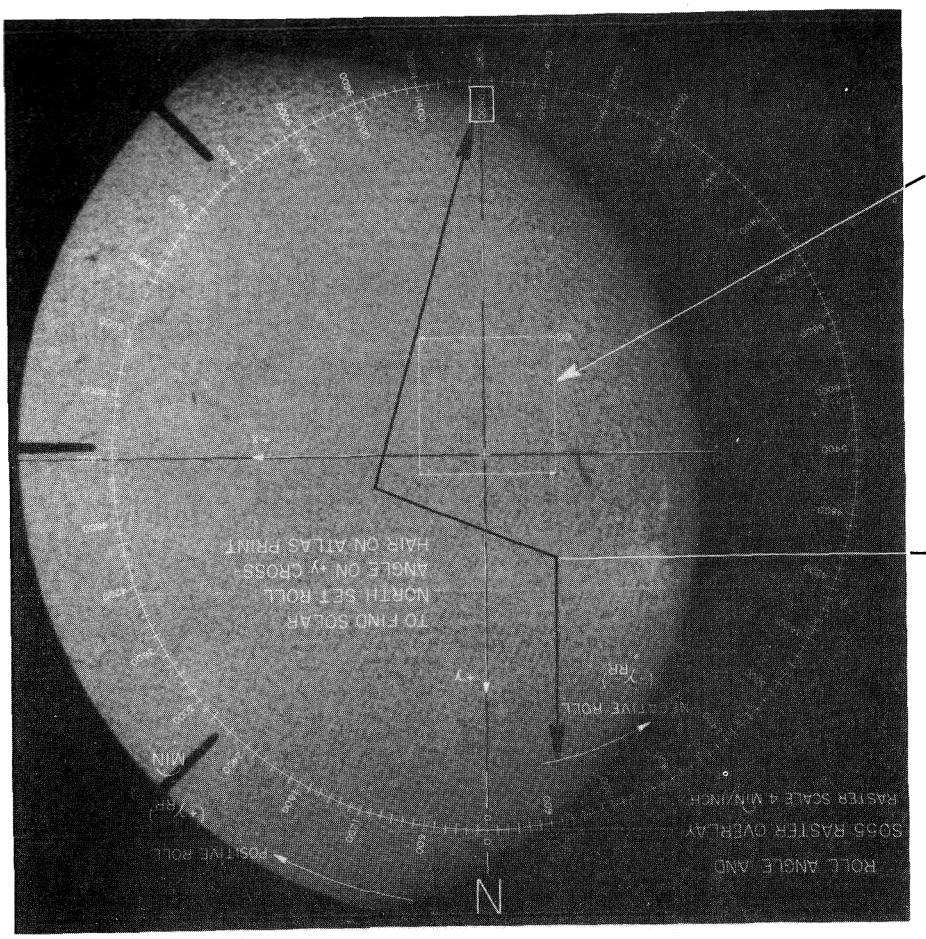

NOT CORRECT ORIENTATION OF RASTER

OVERLAY ROTATED UNTIL -10795 ARC MIN WAS ON +Y AXIS OF (a)

7(b). Frame from Hα film showing use of roll overlay. This is same frame used in 7(a), enlarged to same relative scale as in full disc atlas.

(c) RASTER TAB MICROFICHE

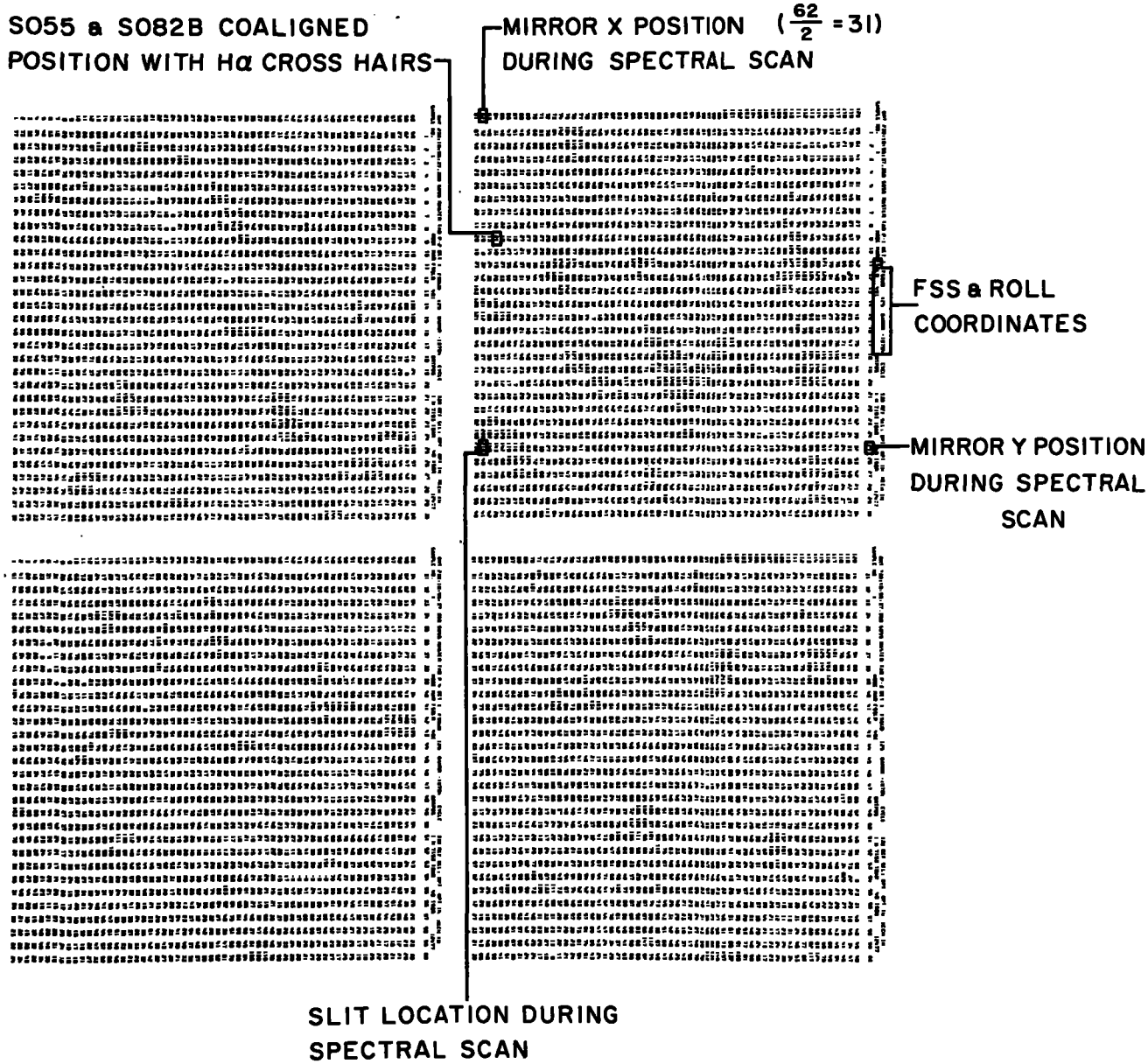

7(c). Raster tab microfiche. Four pages of raster tab have been arranged to represent the full raster as shown in (a) and (d).

(e) SPECTRAL TAB MICROFICHE

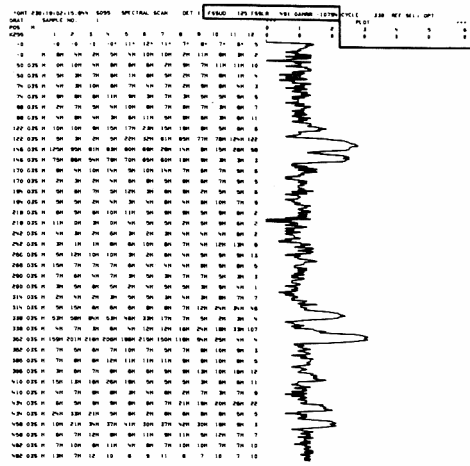

FSS & ROLL COORDINATES

(d) RASTER GRAY SCALE PICTURE MICROFICHE

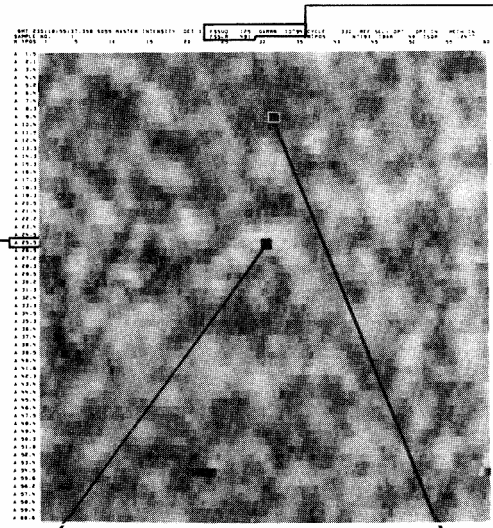

MIRROR Y POSITION DURING SPECTRAL SCAN

SLIT LOCATION DURING SPECTRAL SCAN

S055 & S082B COALIGNED POSITION WITH Hα CROSS HAIRS

7(e). Spectral tab microfiche, showing only the beginning position.

7(d). Raster grey-scale picture microfiche.

(f) SPECTRAL COROLLARY DATA MICROFICHE

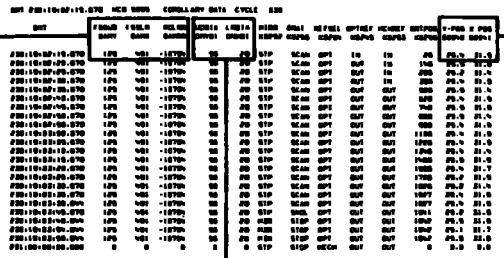

MIRROR POSITION DURING SPECTRAL SCAN

S082 B X & Y BIASES

FSS & ROLL COORDINATES

(g) RASTER COROLLARY DATA MICROFICHE

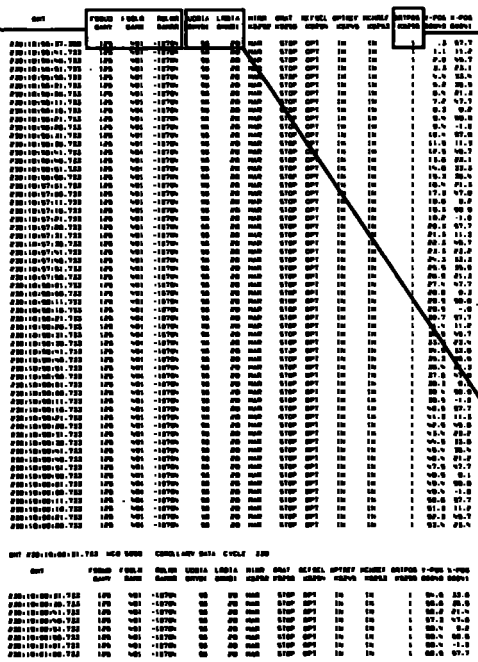

GRATING POSITION DURING RASTER SCAN (1 STEP FROM OPTICAL REFERENCE)

S082B X&Y BIASES

7(f). Corollary data microfiche for spectral data.

7(g). Corollary data microfiche for raster data.

Figure 7(a) shows a page from the Hα atlas at 19:07:00 GMT. Although the time is later than the raster or the spectral data in our illustration, the pointing has not changed. The S055 overlay is superimposed on the atlas page. UP is up, and RIGHT is right, as in (b), (c), and (d). The S055 overlay shows how the raster is oriented with respect to the Hα cross-hairs. The S055 and S082B coaligned position is at the intersection of the cross hairs. The FSS coordinates are located from the biases appearing in the Hα atlas data-block and the two corollary-data microfiche (Figures 7(f) and 7(g). The biases, y = 56 arc sec, x = 29 arc sec, indicate that the FSS pointing axis is located 56 arc sec up and 29 arc sec to the right of the cross-hair intersection.

Figure 7(b) shows how to use the roll overlay, which is included in the *Hα Film and Atlas Guide*, to find solar north. (Caution: do not use the overlay to determine orientation of the raster.) In 7(b) the same Hα frame as in 7(a) is used, enlarged to the same scale as in the full disc atlas. The roll overlay is superimposed. This frame does not appear in the full disc atlas because the pointing is not sun-centered. The roll overlay does not show the correct orientation of the raster, because +y in the raster is always up. In the example, γ_{RR} = -10795 arc min. The overlay is placed on the Hα photo with +y pointing up. The negative roll values are on the inside of the circle, so that the overlay must be rotated until -10795 on the inside of the circle is aligned with the up axis. We see that north is in the down direction. The same roll overlay may also be used to find north on a page in the regular atlas; but note again (with the caution again) that the raster size and orientation will not be correct.

Figure 7(c) shows the four pages from the raster tab microfiche, rearranged to spatially reconstruct the raster. Figure 7(d) shows the grey-scale raster microfiche picture, oriented to match the Hα pictures and the raster tab microfiche. Figure 7(e) shows the beginning portion of the spectral tab data for the scan that started at 19:02:15 GMT. Figure 7(f) shows the corollary data pertaining to the spectral data. Figure 7(g) shows the corollary data pertaining to the raster data.

In (c), (d), and (g) it can be seen that the grating position during the raster is 1 step from optical reference. This is the first polychromatic mode.

The mirror position during spectral scan is given in (f) as y = 25.4 and x = 31.5. The decimals should be ignored, which means that the spectral data were taken at line 25, position 31. The location of the Hα reticles at the coaligned position is pointed out at line 9, position 32 in (c), the raster tabulation, and in (d), the grey-scale picture. The coaligned position appears in the *Pointing Reference Handbook*, Table 5, page 26. The last coalignment was at 228:16:30 GMT, when the science pilot (SPT) performed a 4-limb coalignment. Position 32 corresponds to position 64 in the raster tab (c) because there are 120 rather than 60 data samples on each line.

3. PROGRAM DESCRIPTION

3.1 ATM and SO55 Development

The early studies of ATOM (Astronomical Telescope Orientation Mount), which later became ATM (Apollo Telescope Mount) were conducted in 1965 at the time when the cancellation of AOSO (Advanced Orbiting Solar Observatory) was impending. The experiments and principal investigators were transferred as a group to the new ATM program, which was being planned as a manned mission in the Apollo Applications Program.

The original ATM concept [1], in which the crew and experiments were to be in a command service module, was abandoned in 1966 in favor of the expanded concept of a manned space station having teams of astronauts to visit, dock, perform experiments, and live in orbit for two or more weeks before returning to earth, leaving the space station in a condition able to receive the visits of subsequent crews. The orbital work shop (OWS) was the main area for crew living and working.

Under the "wet workshop" concept, the OWS was a Saturn IBV stage, used first as a launch vehicle for the space station. After insertion into orbit the crew would arrive in a CSM launched on an S IVB, and convert the OWS to a workshop by draining the remaining liquid hydrogen, venting, and activating the equipment stored in closets within the now empty fuel tank.

Under the "dry workshop" scheme, the S IVB stage was completely equipped on the ground before launch, and the space station was launched on a two-stage Saturn V. More complex

equipment and facilities were possible with the enlarged program. Earth-resources, corollary, and medical experiments were added to the ATM solar experiments.

In the initial ATM program of 1965, the Harvard College Observatory was to provide two experiments, S055A and S055B, and an Hα pointing reference telescope. The S055A instrument, equipped with a polychromator and a rastering telescope mirror, covered the UV spectrum from 500-1350 Å with 10 open photomultiplier detectors. The S055B instrument, equipped with an Ebert spectrometer and a scanning grating, covered the UV spectrum from 1400-2250 Å with two sealed photomultipliers.

By mid-1967, since NASA had scheduled a late-1969 launch for the first ATM, and a reflight was planned, the HCO concept was revised to provide a single, simpler instrument on the first ATM: an EUV scanning spectrometer (S083), the so-called S055C instrument, with two channel electron multipliers covering the wavelength region 300-1300 Å. The Hα telescope continued as a separate instrument to be included in both missions, and development of the A and B instruments continued for the second ATM.

By mid-1968, however, the first ATM launch date had been postponed and a second ATM was deleted. The HCO concept then reverted to S055A, and work on S055B and S083 was stopped. S055A became a scanning spectrometer with seven detectors, covering 550 Å to 1335 Å in the polychromatic mode, and 296 Å to 1350 Å in the wavelength-scan mode. Grating single-step capability provided other polychromatic combinations, and mirror line scan was added for high temporal resolution. To satisfy coalignment requirements with S082B, the mirror step

and mirror line select capabilities were also added.

The Hα telescope had also evolved during this period, because of its importance in providing a continuous pointing record on film to all ATM experimenters, and its use as a pointing telescope by the crew. A backup for the latter function was added to the complement of telescopes on the spar, as Hα 2.

In late 1968, remote-command capabilities were added for the scientific experiments, which made it possible to obtain hundreds of additional hours of solar observations during periods of crew sleep and rest, and between the manned missions.

In the Hα program, HCO provided scientific guidance, filter development, and test program support at the Lockheed Solar Observatory, Rye Canyon Research Facility, Lockheed California Corp. The telescopes were constructed by Perkin Elmer Corporation under a NASA contract.

The S055A instrument was designed, constructed, and tested by Ball Brothers Research Corporation [8] in conjunction with the scientists and engineers of HCO. The spectrometer was built as a removable subsystem so that it could be tested and calibrated separately at HCO. The channel electron photomultiplier detectors were provided by Bendix Research Corporation. The high-voltage power supplies were provided by Bendix and EMR Photoelectric, and the primary mirror by Muffoletto Optical Co.

Two complete instrument systems were built: prototype, later refurbished to become the flight backup; and a flight unit. Five spectrometers were built: the engineering model,

the calibration model, the prototype, the flight model, and the flight spare. The last was installed in the prototype instrument when it was refurbished to become the flight backup. A thermal mechanical unit of the instrument was built to test thermal performance, and became part of the ATM thermal unit. The prototype instrument was used for qualification: functional and environmental testing.

Photometric calibration [9] of the flight and flight spare spectrometers was performed at HCO with a hollow-cathode artificial UV source and a liquid helium cryosorption-pumped chamber. The UV functional performance of the instrument was measured [10] before and after delivery to NASA with a similar source and a Cassegrain optical system.

3.2 Spacecraft Integration and Test

The flight instrument was delivered to NASA/MSFC 9 July 1971. NASA integration and test operations consisted of installation and alignment on the ATM spar, checkout, and thermal vacuum test of ATM in chamber A at JSC in the sun-end-up orientation. After thermal vacuum test in September 1972, the S055 instrument was subjected to a functional UV-vacuum test in the sun-end-down configuration in chamber A with an artificial UV source and a Cassegrain collimating system. This test verified that instrument sensitivity and detector performance had not deteriorated since pre-delivery testing.

Integration and checkout of ATM with Skylab was performed at Kennedy Space Center (KSC) in the operations and checkout building. A dynamic disturbance test was performed to measure the effect of ATM camera operations on the S055 optical alignment; no significant disturbance could be detected. Skylab

was assembled in the vehicle assembly building by stacking the Apollo Telescope Mount, the multiple docking adapter, and the orbiting workshop. Skylab was launched 14 May 1973.

3.3 Calibration Rocket Program

The Calroc program [11] was undertaken to provide reliable in-flight calibration data of the S055 instrument, because the last photometric calibration was performed 2.5 years before launch, and the last functional test with UV was done 9 months before launch. The Calroc instrument and S055 measured the average intensity from a quiet area of the sun within an orbit or two of each other. The Calroc measured the emission from a 4 x 4(arc min)^2 area lying within the 5.5 x 5(arc min)^2 field of view of S055. Calroc was photometrically calibrated immediately before and immediately after flight, and was thus able to measure changes in sensitivity of S055 since its last calibration. The region observed was a quiet region free of centers of activity, filamentary structure, and coronal holes.

The Calroc instrument was flown on a Black Brandt VC rocket from White Sands, N.M., to a peak altitude of 270 km, and the scientific payload was recovered. The Calroc package was equipped with a pointing reference system, which used a Nikon-F 35 mm camera to photograph the solar image in the slit jaw mirror at the entrance slit of the spectrometer. Immediately after recovery the film was developed, and the exact pointing coordinates were used to verify the coincidence of ATM and Calroc pointing. ATM observation commenced on the orbit following the successful rocket launch, and extended over three orbits.

Three Calroc flights were attempted. The first, day 155 (4 June 1973), was destroyed by the range officer when the rocket started to go off course because of high winds and improper tower setting. The second, day 221 (9 August 1973), was mostly successful. (A failure of one of the two detectors caused a loss of data below 800 Å, although it was possible to observe second-order data with the remaining detector down to 499 Å.) The third flight, day 344 (10 December 1973), was completely successful and excellent data were obtained from both detectors over the full wavelength range.

3.4 Hα Telescope Development

The Hα 1 telescope provided a continuous record of ATM pointing on film. The two telescopes (Hα 1 and Hα 2) provided video displays for use by the crew for ATM pointing. Figures 8 and 9 show the Hα 1 and Hα 2 optical schematics. Figure 10 describes the filter's optical characteristics, and Figure 11 illustrates a page from the Hα atlas.

The Hα 1 and Hα 2 telescopes have the same heat rejection windows, 6.75-inch Cassegrain imaging system, reticle system, and Fabry-Perot filter package, but the Hα 1 telescope is equipped with both film and video cameras. Thus the Hα 1 telescope has a beamsplitter, and a different configuration behind the filter oven in order to accommodate the relay lenses for both film and video imaging system, and the video zoom lenses.

In the Hα 1 telescope, the field of view on film is 35 arc min. The full solar disc therefore lies entirely within the field of view when ATM pointing is within 1.5 arc min of sun center. The field of view on video is variable with the

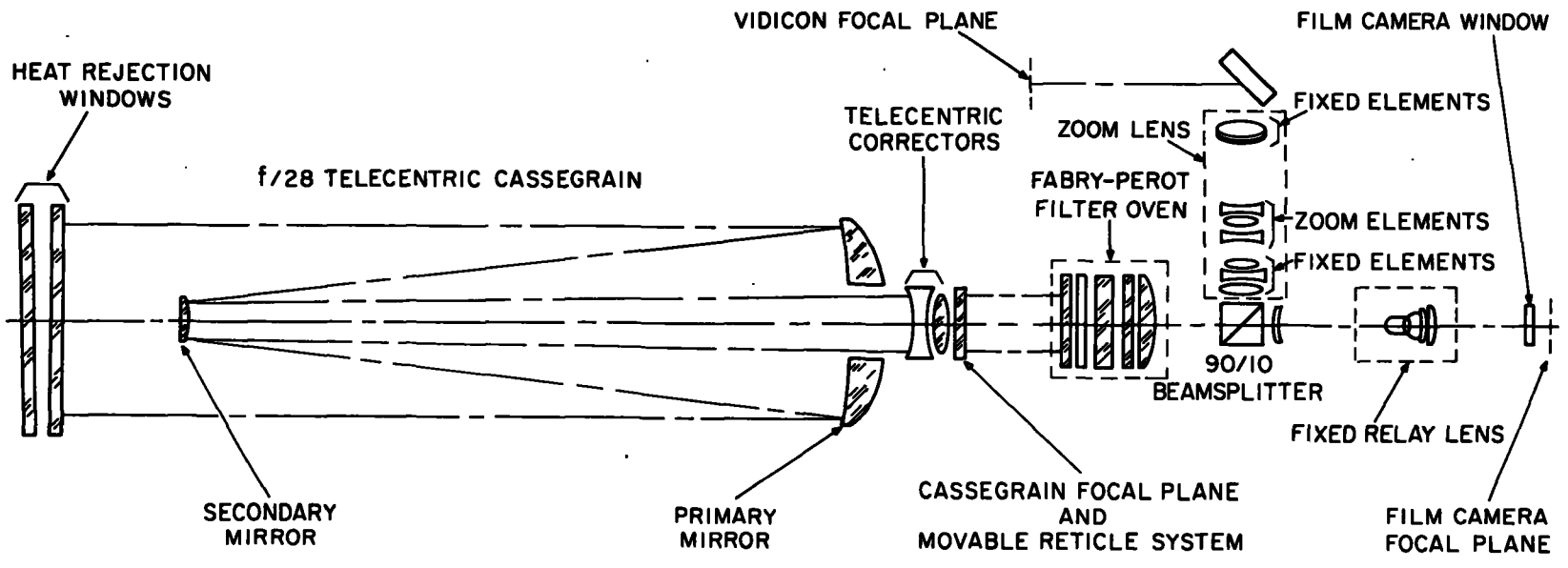

8. Hα 1 optical schematic.

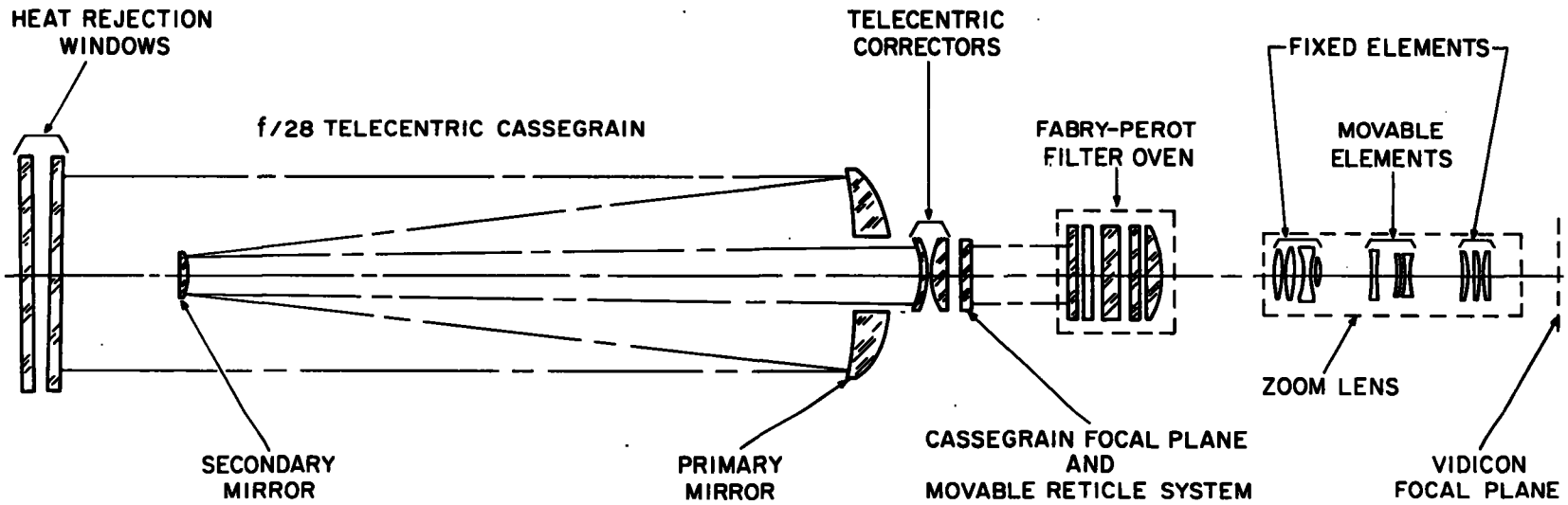

9. Hα 2 optical schematic.

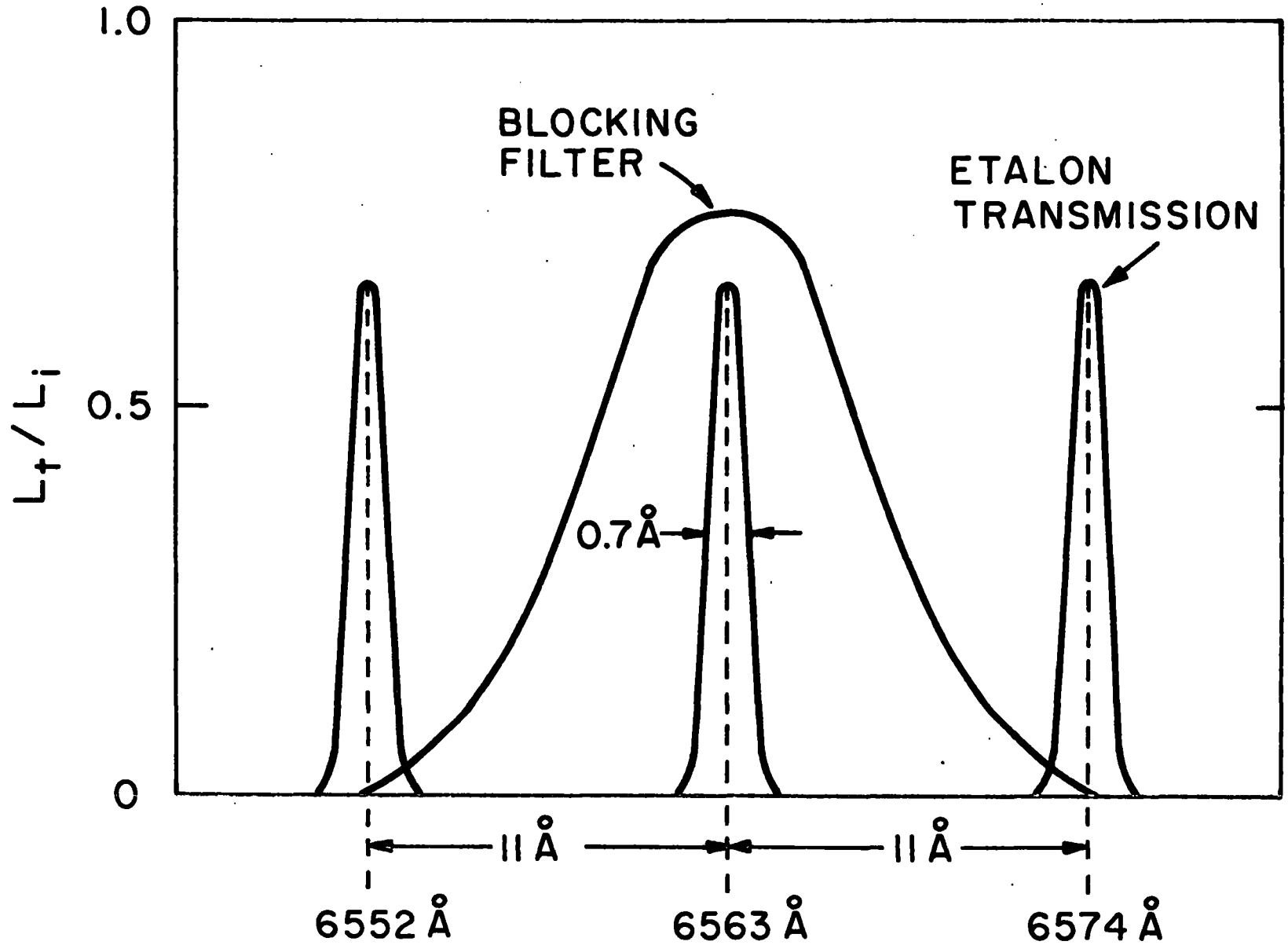

10. Optical characteristics of Hα narrow-band and blocking filters, for the Hα 1 and Hα 2 telescopes.

FSS	GAM X	96		SO 55	1	2	3	4	5	6	7		
	Y	−9		DETECTORS:	1	1	1	1	0	1	1		
RR	RR	−5400											
				MODE:	STOP								
SO52	PES X			MIRROR:	POS. X	33.4							
	Y				POS. Y	10.4							
SO82	BIAS X	95		GRATING:	POS.	0							
	Y	19			REF.	OPTICAL							

DOY 14 GMT 21:19:00 SRT 48 CYCLE 3787

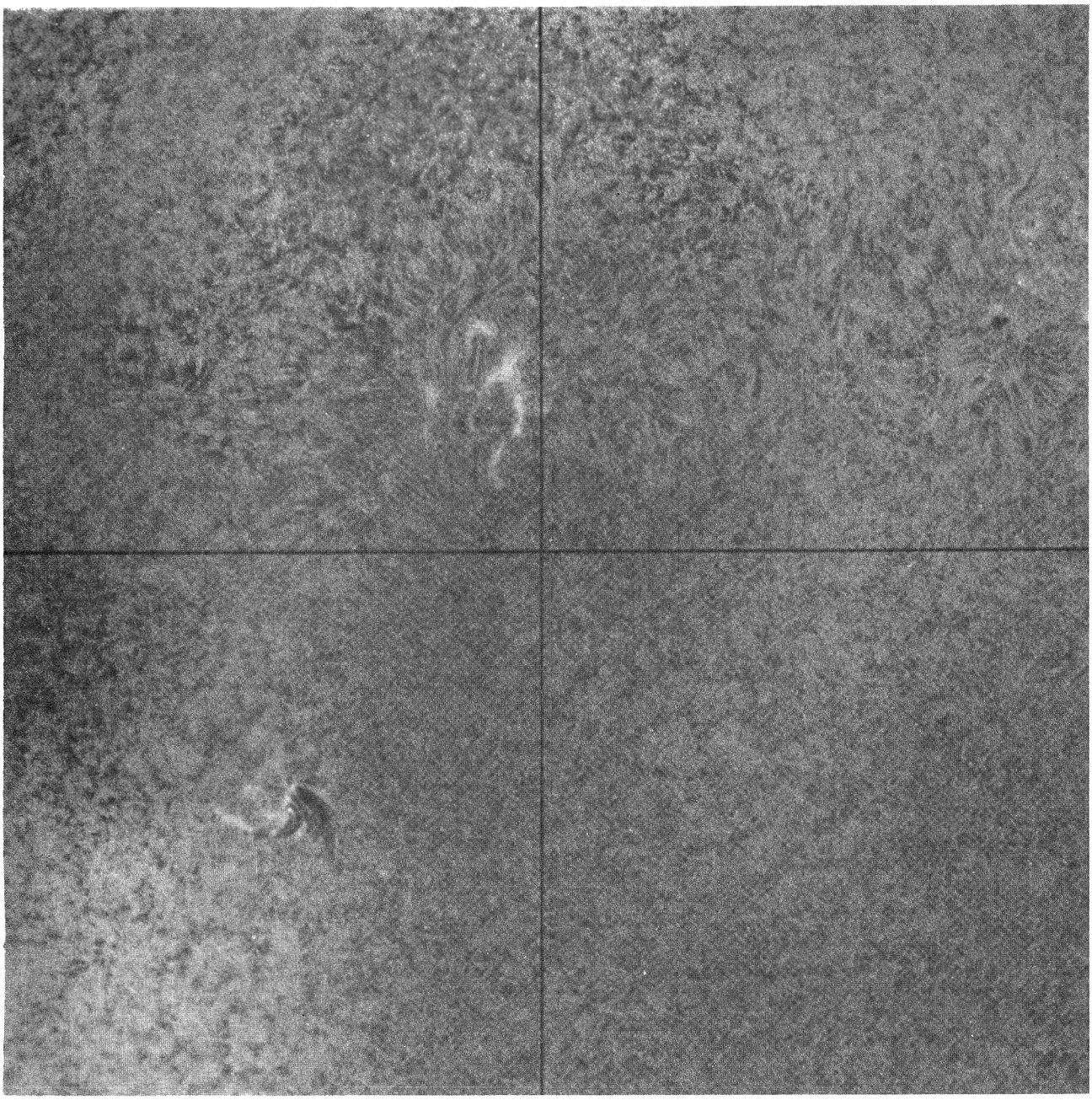

11. Sample page, Hα Atlas.

zoom lens between 4.4 and 16 arc min. The spatial resolution is 1.5 arc sec on film and video at maximum zoom magnification.

In the Hα 2 telescope, the field of view of the video display can be varied, between 7 and 35 arc sec at maximum zoom magnification.

The reticle system on both telescopes, consisting of a wire reticle in the Cassegrain focal plain, could be moved over a range of ± 3.5 arc min by the astronaut, from a switch on the C and D panel. The reticle on Hα 1 was coaligned throughout the mission with the center of the SO82B slit and the coaligned position of the SO55 raster on line 8, 9, or 10 (see sections 2.2.2, 2.3, and the *Pointing Reference Handbook*, section II). The reticle on Hα 2 was coaligned with the Hα 1 reticle during the first Skylab mission (SL 2), and with line 25 of the SO55 raster pattern during SL 3 and SL 4. Both telescopes were used by the crew in pointing SO55 and the ATM instruments. Hα 1 was generally used when coalignment between SO55 and SO82B was critical. Hα 2 was used at other times when it was desired to locate a particular solar feature nearer to the center of the raster.

One prototype model and one flight model were built of both the Hα 1 and Hα 2 telescopes, and an engineering model was built to provide a test unit for evaluation of Fabry-Perot interferometers at Rye Canyon,California. Filters were tested in the engineering model of the telescope in sunlight, and also in a bench-mounted spectrograph, to evaluate uniformity, spectral drift of bandpass, and transmission profile as a function of time. A Fabry-Perot interferometer was chosen as both the blocking filter and the narrow-band (0.7 Å FWHM) element, because of

the need for a compact, space-qualified filter package, with greater transmission than birefringent filters. The Fabry-Perot filter was considered to be particularly useful in finding flares and observing chromospheric structure. During filter development there were two major problems: nonuniformities across the filter aperture, and spectral drift of the center of the bandpass with time.

Changes in coating procedures and thermal curing made it possible to provide filters that remained on-band at 6563 Å from the time of acceptance to the completion of SL 4. The sealed filter oven, thermally controlled, eliminated the possibly harmful effects of vacuum in outer space. A pulsed dye laser system at 6563 Å was developed at HCO and used to measure telescope transmission, filter profiles, and telescope transmission after delivery to NASA, in order to ensure that aging effects in the filter would remain within tolerance limits for the projected lifetime of the mission. These tests were performed at regular intervals during spacecraft integration and test, at MSFC, JSC, and KSC. The last filter profile was taken at KSC before ATM was moved to the Vehicle Assembly building (VAB) for stacking with Skylab.

3.5 Mission Operations

The condensed mission profile is shown in Figure 12. During the SL 2, SL 3, and SL 4 manned Skylab missions, the experiment was operated by an astronaut at the ATM control panel (described in the *S055 Experiment Handbook)* during the crew work-day, and by ground command from Houston during crew sleep or rest periods. Between the Skylab 2 and Skylab 3

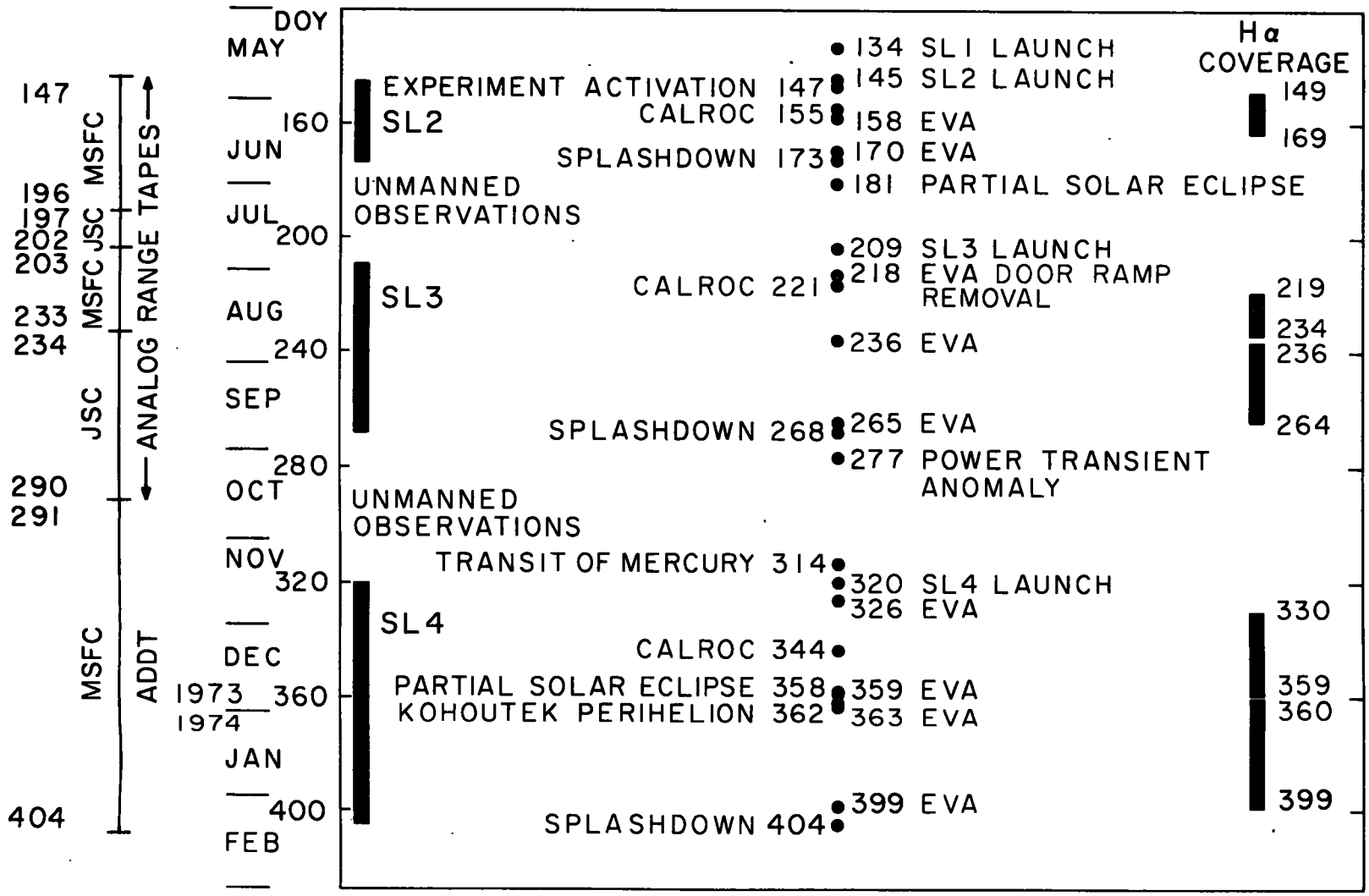

12. Condensed mission profile. The production of final data tapes, between JSC and MSFC, and ADDT or analog, is shown on the left.

missions, and the Skylab 3 and Skylab 4 missions, when no crew were in orbit, more limited instrument operations (16 hours per day by remote command from Houston) were performed.

A series of observations was planned in the year before launch, so that the six ATM instruments, which had varied wavelength ranges, fields of view, and scientific objective, would operate at maximum efficiency with a minimum of incompatibilities [12]. The Joint Observing Programs (JOPs) were made up of Building Blocks (BBs) which specified the detailed operations of each ATM experiment. The number of JOPs expanded from 14 at SL 2 liftoff, to 27 at SL 4 splashdown; they provided a variety of coordinated observations of, for example, solar flares, active regions, filaments, chromospheric oscillations, and synoptic observations. Special JOPs were written during the mission for particular events, such as the advent of Comet Kohoutek and the solar eclipse of 31 June 1973.

JOPs and BBs were selected each day during Skylab in a planning session by the ATM experimenters, who used the latest solar data and predictions provided by the National Oceanographic and Atmospheric Administration (NOAA) and Skylab quick-look data. The JOP summary sheets, developed during crew training and simulations, provided the crew with step-by-step procedures and detailed instructions relating to grating positions, instrument modes, and detector activation. The observing schedule for each day was transmitted the previous night to the crew by teleprinter, along with the latest report of solar conditions. Additional instructions were given by voice communication and in weekly science conferences between one of the ATM principal investigators and the crew. The crews were given

observing periods without scheduled operations when they could exercise their own judgement as to what scientific data to take. They were also given freedom to interrupt scheduled observations so as to take advantage of unexpected solar events. As the mission progressed, these opportunities were increasingly effective. "Shopping list" items, for which scheduled time was provided, were an additional set of observing sequences to be performed by the astronaut at his descretion.

The ATM Science Room was staffed by the ATM "czar" and by a NASA flight controller known as ATM Plans, together with representatives from the five ATM experiments at their respective consoles. The czar was selected from among the ATM principal investigators to act, for a period of up to five days, as a spokesman and a single voice for ATM as liaison with Mission Control. His point of contact on the NASA side was ATM Plans, who was responsible to the ATM experiment officer in the Mission Control Center across the hall. The czar's principal duties were to verify the execution of the planned ATM observations, deal with changes or problems in their execution, and settle conflicts between individual ATM experiments.

During the manned missions the czars were scheduled on three eight-hour shifts each day, designed to coincide approximately with the three shifts of the NASA flight-control teams. The "execute" shift (0800 - 1600 Houston time) covered the crew work day when the crew operated ATM from the control and display panel. The "planning" shift (1600 - 2400 Houston time) covered the end of the crew workday, and the subsequent unattended operations. The "summary"shift (2400 - 0800 Houston

time) covered the remaining unattended observations and the start of the manned observations of the next morning.

The planning chairman, or czar of the planning meeting, performed a similar duty in each of the daily planning meetings and maintained responsibility for and cognizance of the planned observing schedule until it was officially accepted by the ATM experiment officer and transmitted to the crew on the program approval document (PAD) scheduled for execution the following day. The summary flight plan, generated during the early morning on the summary shift, selected, among other things, the orbit and blocks of time that would be available for ATM observations, and formed the basis for the detailed schedule of ATM observations that was prepared in the afternoon planning sessions.

The HCO experiment console was staffed by engineers who maintained contact with that day's HCO duty scientist in the Mission Control Center or remained on call. The HCO engineers and scientists were responsible for monitoring the implementation of the planned scientific program from real-time data appearing on the console, and for verifying the physical operation of the instrument. Other engineers in a nearby room made requests for quick-look data batches after each orbit. The duty scientist had overall responsibility for the science or changes in the scheduled observations for the entire day, and represented HCO in the science planning meeting.

3.6 Instrument Activation, Anomalies and Malfunctions

3.6.1 Orbital activation. It was originally planned that an astronaut would activate the instrument in a pre-

planned sequence at the start of ATM operations. During the Skylab launch, however, the loss of one Skylab solar panel and the failure of another to deploy in orbit, plus the loss of the meteoroid heat shield, caused a complete revision of all activation plans; as a result, turn-on of the instrument for the first time was made by remote command from the ground.

On day 144 (24 May 1973) the crew powered up the C and D panels, activated instrument high voltage and the ATM experiment pointing-control system, and released the launch lock on the S055 primary mirror. The thermal control system, with its own separate power bus, was activated by ground command on day 147 (May 27).

Instrument activation then continued on days 147 and 148 (May 27 and 28) by turning on main power and energizing the grating drive, mirror raster, and detector high voltages. Each system's operation was verified before proceeding to the next. Before high voltage was turned on, pressure in the spectrometer was measured with a cold-cathode ionization gauge. The first reading, door closed, on day 147 (May 27) was 6×10^{-5} Torr. The next day, 8 minutes after the door was opened, pressure was 3×10^{-5} Torr. A few hours later, before the high voltage was turned on, the pressure was 1×10^{-5} Torr with the door open. The detectors were first turned on with ATM pointing off the solar disc, where 0 counts were observed, as expected; then on the disc, where 30 to 1200 counts per integration time were observed. Then the first raster and spectral data were received and evaluated, confirming a completely satisfactory instrument performance.

3.6.2 Malfunctions and anomalies. There were three significant and potentially serious malfunctions of the instrument, yet none had a lasting impact on the quality of the scientific data.

Aperture door. Each ATM instrument had its own door, provided by NASA, located in the ATM heat shield and operated by a motor-driven lead-screw assembly (Figure 13).

The purpose of the door was to prevent the entry of contaminants during venting and waste dumps, to prevent loss of thermal energy at orbit night, and to prevent entry of solar energy at oblique angles during momentum dumps at high beta angles. The door was designed to open and close automatically at orbital sunrise and sunset on a signal from the ATM digital computer. This automatic operation could be overridden, and the door could also be operated by ground command or by a switch on the control panel in orbit.

Each door was equipped with a primary and secondary drive motor on a common shaft. Each motor could be used separately, or both could be used together if added torque was needed. On closing, the door fitted into a ramp-latch which held it tight against the instrument aperture, a feature that was required only for ground testing in negative one G, but was not removed before launch. Each door was also equipped with a pin which, when extracted by an astronaut, disabled the drive mechanism so that the existing door position could not be changed.

During prelaunch testing, because of problems with sticking doors, the mechanisms and controls were redesigned. Once in orbit, most of the experiment doors malfunctioned at one time or another, primarily because of friction on the

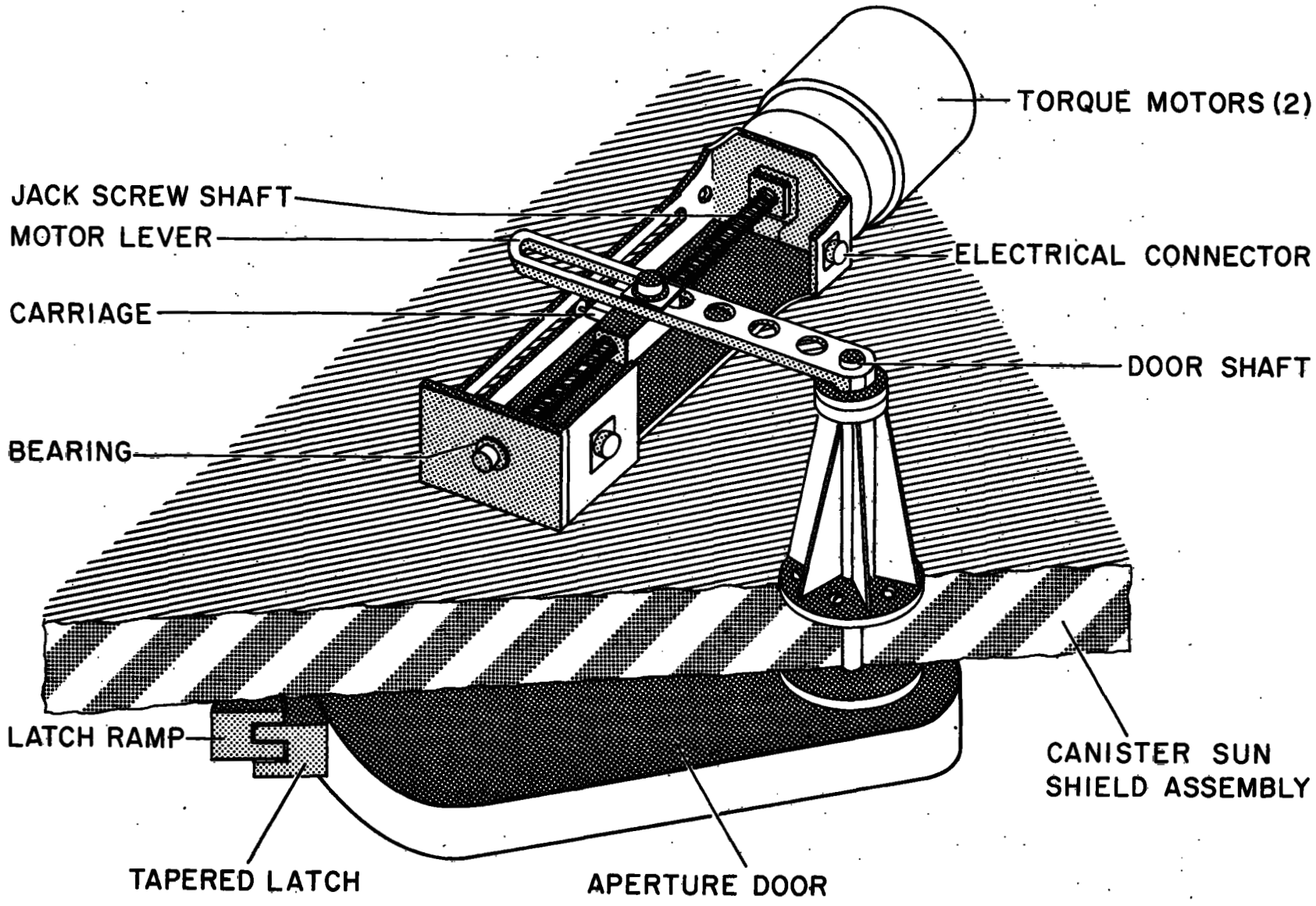

13. Aperture door mechanism.

ramp-latch. The S055 door first malfunctioned in orbit on day 164 (June 13) at 07:30 GMT when neither the door-open nor door-closed indication was received at orbit sunrise. Investigation revealed that the door was just slightly open--enough to prevent the microswitch from giving the door-closed signal because it had failed to close completely on the previous orbit's sunset. The preplanned malfunction procedure was followed by using ground commands during unattended operations to save crew time, and the door was opened on one motor. Automatic door operations were then resumed. The next malfunction was at 21:40 GMT on day 172 (June 21) (the day before the crew left Skylab), when the door again failed to close completely at orbit sunset. Since this was a time of high beta angle (67°), it was decided not to inhibit automatic operations but to leave the door open because momentum dumps were occurring in sunlight. The malfunction procedure was again used and the door closed properly.

Between day 164 (June 13) and day 185 (July 4) the door failed in the same way several times. Each time the malfunction procedure was used and recovery was accomplished, but the door-closing; which should have taken 8 to 10 seconds, required a time up to 53 seconds. Additional testing was done on the ground, with the ATM flight backup unit at MSFC. Two-motor operation was considered, but it was feared that the door would become jammed after having been driven shut by two motors.

During unmanned operations between the second and third Skylab missions, the automatic door switch was put in the inhibit position and the door was left open during the 16 hours of experiment observations each day. This could not be considered

a satisfactory solution for manned operations because waste dumps and momentum dumps at high beta angles could occur during SL 3.

On day 181 (July 30) (the day of partial solar eclipse) both primary and secondary motors individually malfunctioned, and two-motor door operation was initiated. Preparations had already been made for the SL 3 crew to remove the ramp-latch if necessary on the first extra vehicular activity (EVA) of SL 3. Two-motor operation continued until day 214 (August 2) when the door again malfunctioned, and the decision was made to remove the ramp-latch at the earliest opportunity. During the first EVA of SL 3, on day 218 (August 6), the crew observed the door in operation and verified that the failure was caused by friction against the ramp-latch. The latch was then removed by taking out two bolts with a 7/16-inch open-end wrench, and the latch was returned to earth by the crew at the end of SL 3. The door functioned perfectly for the rest of the mission.

Detector trip-outs. Both the OSO-2 and OSO-4 instruments constructed by HCO experienced electrical failures in orbit, which were attributed to corona and high-voltage breakdown. These, and the OSO-6 instrument, used crossed-field open photomultipliers with two-kV power supplies. The power supply in the OSO-6 instrument was protected by a current-sensing overload protection relay, which turned off the power supply in the event of arcing.

In the ATM instrument each of the seven high-voltage power supplies was equipped with a current-sensing circuit and a relay. Two of the power supplies and all seven detectors

were built by Bendix Research Laboratories; the remaining five power supplies were built by EMR Photoelectric.

A block diagram of the trip circuit in the power supply is shown in Figure 14. Figure 15 is a cutaway schematic of detector and power supply. The trip circuit operated by turning off the voltage regulator whenever it sensed a load current of 2.5 times its nominal value. A 5-volt failure signal was produced simultaneously, which caused the remaining six power supplies to be disabled if they were on and if the main high-voltage switch on the panel was activated.

The Bendix and EMR power supplies were basically the same, but significant differences existed. The Bendix trip-circuit was more sensitive than the EMR. Bendix sensed current in the transformer secondary; EMR sensed channel current in the ground return line. The EMR supply was furnished a reset pulse when it was turned on, and it issued a fail signal during turn-on. This did not affect other EMR supplies because of their fast rise time (1/sec), but it caused Bendix supplies to trip. They were therefore turned on last in the sequence.

In normal operations the main high voltage was activated, which caused all seven detectors to turn off if a single one tripped, and caused high voltage to turn on and off with the door's opening and closing. With main high voltage in override, only the supply that tripped was turned off, and high voltage remained on when the door closed.

During prelaunch testing there were several failures of power supplies and detectors because of corona and malfunction of the trip circuits, mostly corrected by changing

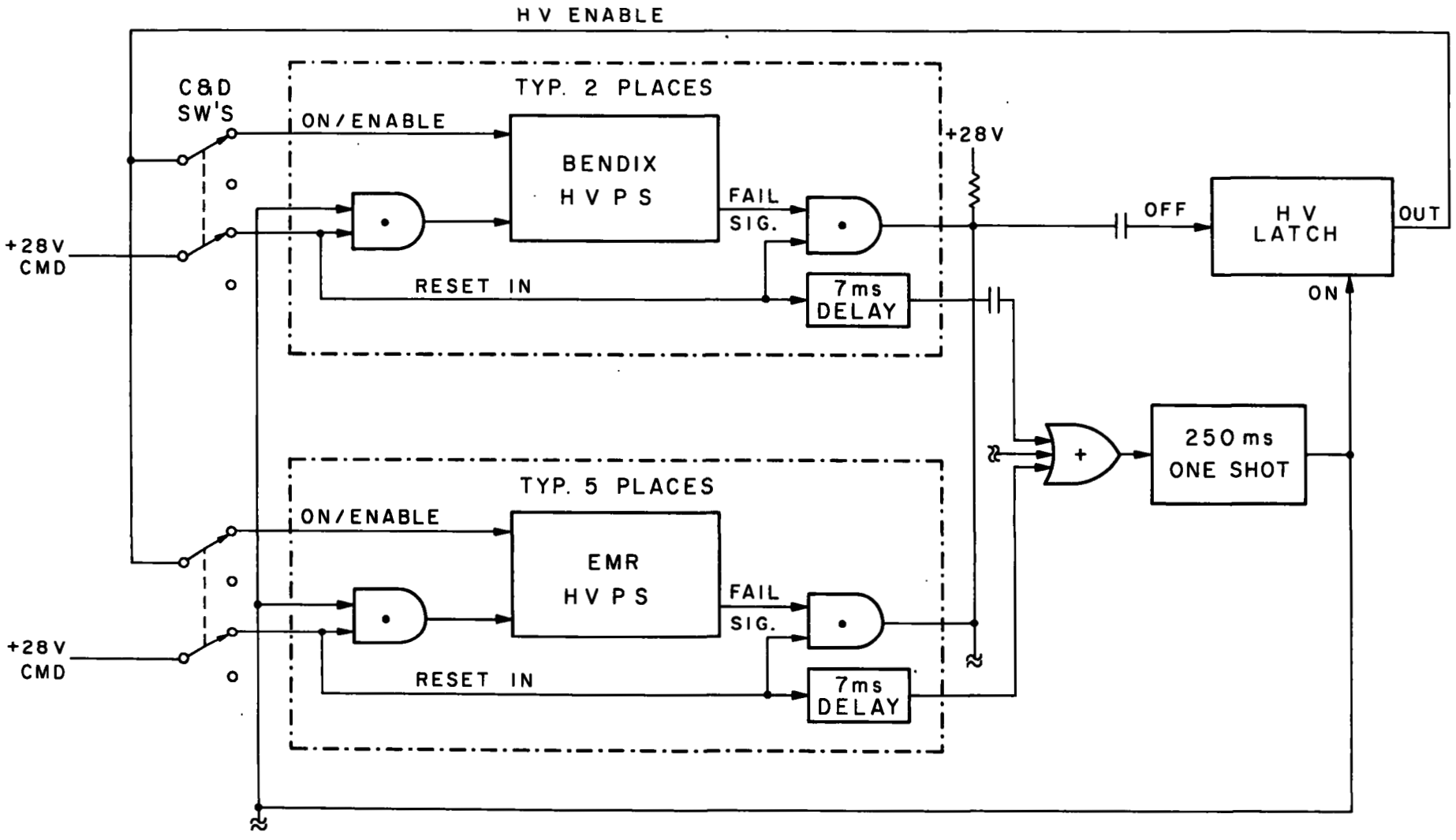

14. Schematic of the high voltage power supply trip circuit. Detectors 5 and 6 used Bendix supplies; all others were EMR.

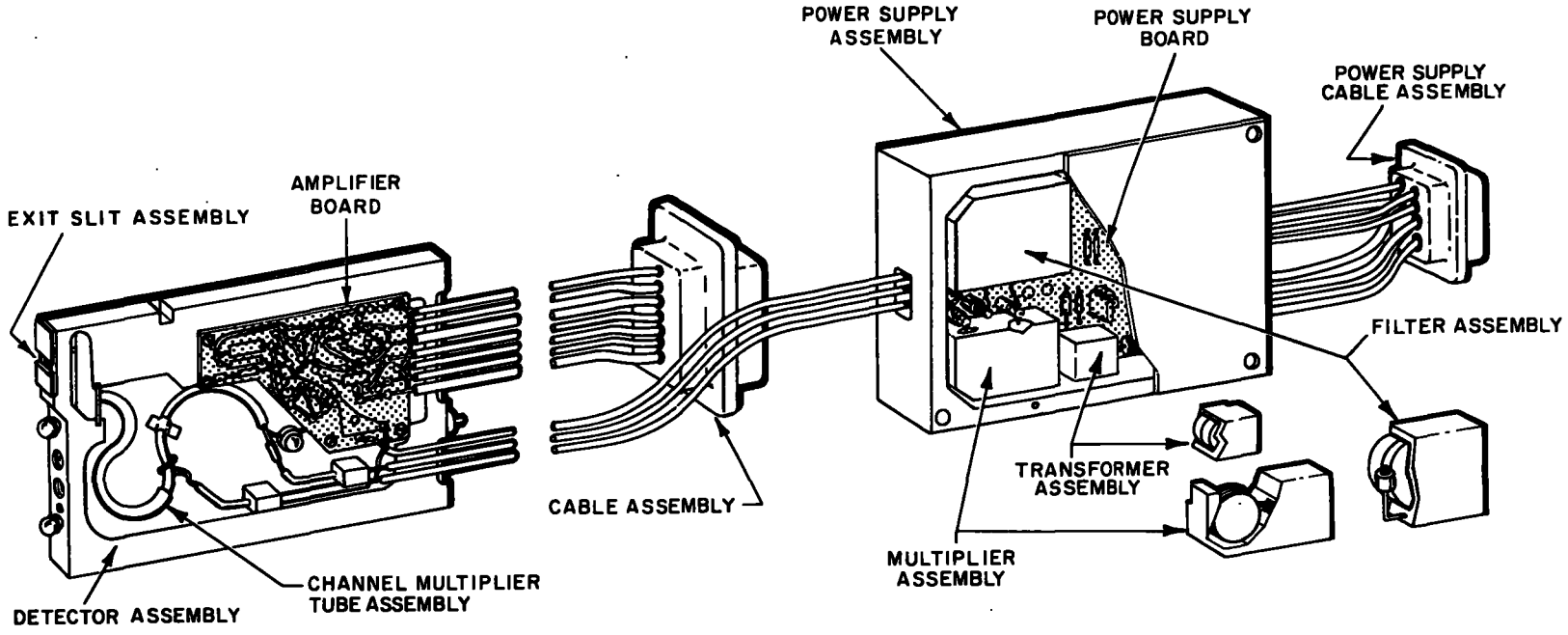

15. Detector and power supply, cutaway view. The Bendix detector and high-voltage power supply are illustrated.

the potting compound and the high-voltage connections, and by redesigning the trip circuit. High-pressure tests and corona tests were conducted with the trip circuit disabled. Pressures of 10^{-2} Torr were required to induce corona, causing loss of gain afterwards but not complete failure. During instrument acceptance tests there were several spurious trip-outs attributed to corona at the high-voltage terminals of the power supplies, requiring replacement of detector and power supply. During ATM thermal-vacuum tests there were trip-outs caused by 1) a misunderstanding of the necessary turn-on sequence, and 2) possible effects of contamination from traces of argon in the gas being used in the artificial UV source. At the time of launch there was still a certain amount of mystery regarding trip-outs, although very thorough testing and analysis and been done.

The first trip-out in orbit occurred early in SL 2 on day 150 (May 30), and trip-outs recurred sporadically throughout the entire SL 2, 3, and 4 missions. During manned operations, data loss was insignificant because the crew was alerted by a red light and immediately reset the detectors. During unattended and unmanned operations, reset had to wait for a station pass.

Trip-outs were not caused by pressure, and probably not by contamination. Spectrometer pressure, measured by a cold cathode ionization gauge inside the spectrometer, was always below 1×10^{-5} Torr with door closed, and 8×10^{-7} Torr with door open. Investigation of detector data during trip-outs indicates that detector 5 caused most of them. They frequently occurred during passage through the South Atlantic Anomaly or the horns of the electron belts, although correlation with the radiation belts is not sufficiently complete to

be convincing, and no theoretical model exists. There was no increase in dark counts while Skylab was passing through the belts.

At the start of SL 3, the crew put main high voltage in override, so that if any single detector tripped it would not turn off the others. Detector 5 tripped frequently, and it was soon left off for most of SL 3. At the end of SL 3, on day 264 (Sept. 21) detector 5 was turned off for a two-month period. No recovery was noticeable at the end of this period, trip-outs occurring at ever-increasing frequency.

Other trip-outs occurred that did not involve detector 5, caused by high detector current during flares, or when the grating zero-order image was mistakenly allowed to be incident on a detector, causing a high count rate.

On days 251 and 252 (Sept. 8 and 9), a series of tests were performed by the crew on detector 5 to evaluate its behavior with the protection circuit disabled. In the first sequence, detector 5 was turned on by itself with the trip circuit in override for four 20-second intervals. Although the other detectors were off, they registered counts of up to 225 per sampling period (0.041 sec) during the initial 2.5 seconds of turn-on. Additional bursts of 2 to 25 counts were also recorded during the 20-second period. In the subsequent 20-second tests, there were only two low-magnitude noise bursts on the other detectors. In all other respects detector 5 operated normally during the test.

In the second test sequence, detector 5 was turned on with the trip circuit again in override for several 40-second periods. Only one noise burst was recorded by the other detectors.

It was concluded that, although detector 5 operated normally without the protection circuit, it caused spurious counts on other detectors and could not be used in this mode. The test also strongly indicated the existence of arcing on detector 5, although of very short duration.

The total data loss from trip-outs was not large, but in the case of solar flares it was significant. And trip-outs were certainly bothersome to the crew and ground-support personnel.

Power transient anomaly. On day 277 (Oct. 4) during orbit night, unmanned operations, an electrical transient caused a series of anomalies in the instrument: 1) Detector 6 tripped out and high counts appeared on all other detectors for 80 to 120 milliseconds. 2) Primary mirror-stow position changed from line 30 step 31 (center of pattern), to line 0 step 30 (edge of pattern), and continued to stow there until the crew returned for SL 4. 3) Grating position indication changed from 0000 to 0001 (first polychromatic position).

At sunrise of the next orbit all functions came back on and the raster was within the nominal requirements. Detector 6 was reset by the door-open signal. Later in that cycle the $\pm$ 20-volt monitors briefly read +7.5 and -16 volts respectively. Ground control noticed that some of the high voltages were reading 50 to 60 volts low. Detectors 4 and 7 then tripped while pointed at a subnormal solar flare. They were reset but all high voltage was then commanded off, to allow time to study the problem. The raster was turned off and the mirror again stowed incorrectly. The main power OFF command was sent and verified twice, but power remained on.

After a study of the data, it was decided to resume experiment operations, but from then until the end of SL 4 the instrument power could not be turned off by ground command, apparently because of a relay failure in the ATM experiment power-bus. The change in high voltages was apparently caused by a switch-over from primary to secondary main power supply during the transient.

When the SL 4 crew activated the experiment they reset the mirror stow position and all operations were normal from then on. The origin of the transient is not known.

ATM/Skylab problems. The problems experienced by Skylab 1 at launch, which produced extremely high temperatures in the workshop, did not affect the ATM film because it was stored in the MDA. The Harvard instrument, being photoelectric, could have operated by ground command if the crew had visited Skylab only long enough to activate the experiment pointing system and the ATM power buses, and to unlock the primary mirror launch-lock.

Other problems in ATM had a definite potential for degrading or terminating experiment data-taking: The failures of the charger-battery-regulator module (CBRM) and of the control moment gyro, part of the attitude control system. Other problems were star-tracker failure, causing loss of precise roll-control; failure of the fine sun sensor, requiring use of the backup; and malfunction of the ATM gimbal actuators. These problems, potentially disastrous to ATM, were overcome by mission control and the crew with relatively small loss of data.

4. NASA DATA PROCESSING SYSTEMS

During a Skylab pass over a remote site, all data that were received at the ground station were recorded in raw form on analog data tapes. At the same time, real-time data were compressed and transmitted to JSC through the NASCOM/GSFC data network, while being recorded on station ADDT tapes. Auxiliary storage and playback (ASAP) data were recorded on board Skylab, transmitted to the ground during station passes, digitized, recorded on station ADDT tapes along with real-time data, and then transmitted to JSC after the pass was completed. The original analog tapes, with data in raw form, were stored at the remote ground-station sites for possible use later. The data processed at the remote sites before transmission to JSC after the pass are referred to as ADDT. At JSC, during the mission, real-time data were combined with ASAP data to form a data bank from which the quick-look data were drawn. ADDT data tapes were to be produced as required to form inclusive batches containing six hours of data. These ADDT tapes were to be transmitted to MSFC for production of final data tapes.

As it developed, however, the final data tapes were not produced until well after the mission. Analog data tapes were used for all SUT's produced at JSC, and for SUT's produced at MSFC prior to day 275 (Aug. 22, 1973) because of excessive noise and dropouts in ADDT data early in the mission. See section 4.3 for a fuller description of the data systems that were used at MSFC and JSC to produce final data.

4.1 Real-Time Data

The 13 ground stations in the NASA Manned Space Flight Network that operated during Skylab are given on the summary flight plan for each day, with the approximate times of the station passes. The exact times of station contact are recorded in the console working logs. Because of the constantly changing ground-trace of Skylab, the stations and the times of station contacts are different for every orbit.

HCO experiment data were recorded in real time by the ATM tape recorders for every orbit. During a station pass the tape recorders were played back at 18 times real time and were recorded by the ground station. Thus 90 minutes of data (1 orbit) could be dumped to the ground in 5 minutes.

As previously described, the real-time and dump data were recorded at the remote site on analog range tapes for possible later use, and they were also processed for transmission to JSC after the pass.

The flow of data from Skylab to JSC is illustrated in Figure 16. Real-time data processing is illustrated in Figure 17. Real-time data were available during Skylab station passes at the experiment consoles in the ATM Science Room. The Harvard team staffed a console 24 hours a day during the SL 2, SL 3, and SL 4 manned missions, and 16 hours a day during the unmanned intervals between the manned missions. The console was equipped with a cathode-ray data display (with copying capability) and the ability to select any data channel in the Mission Control Center. Data sampling rates were once/sec for engineering data and once/15 sec for detector counts, sufficient only to verify that the experiment was operating

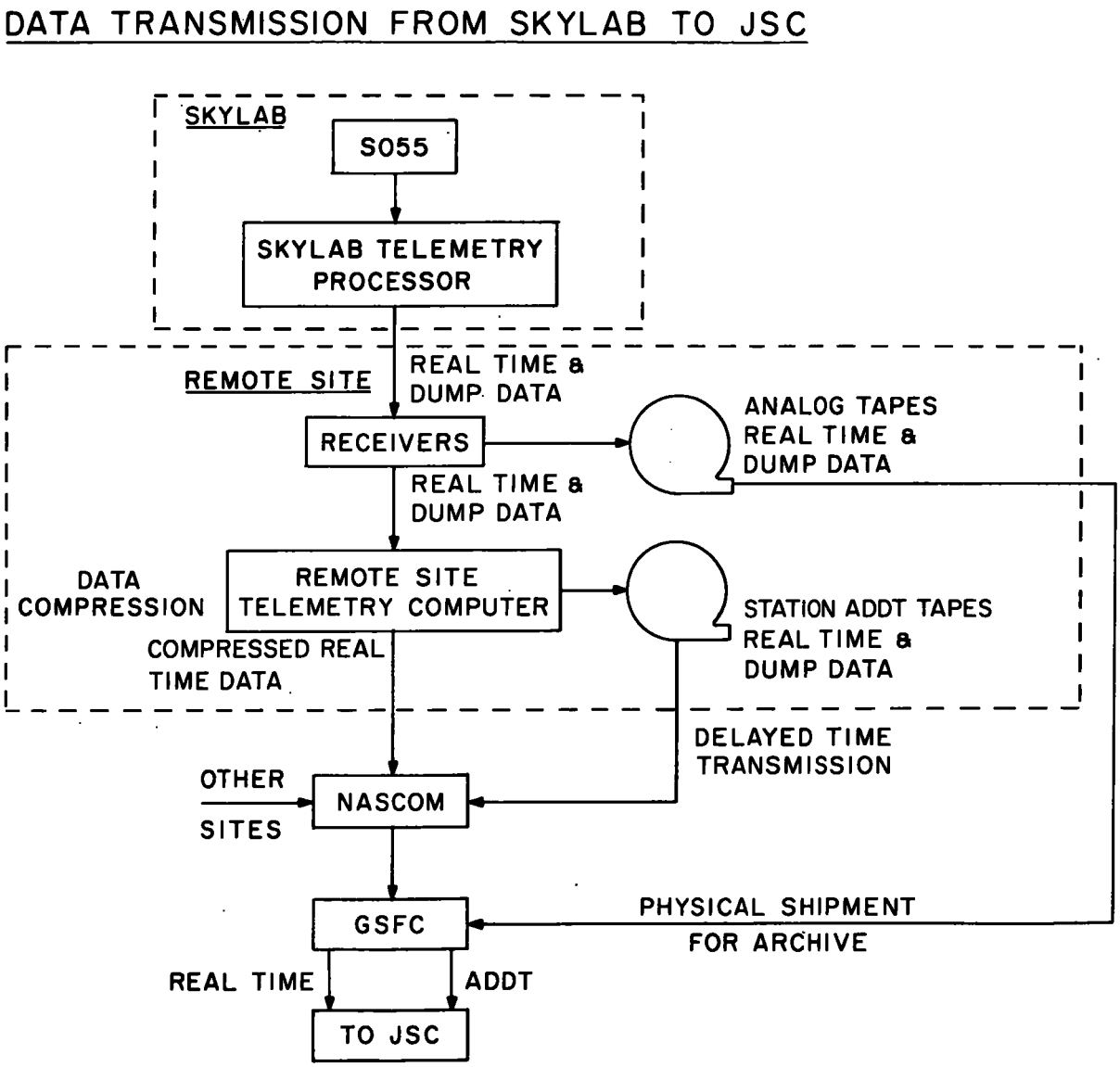

16. Data transmission from Skylab to JSC.

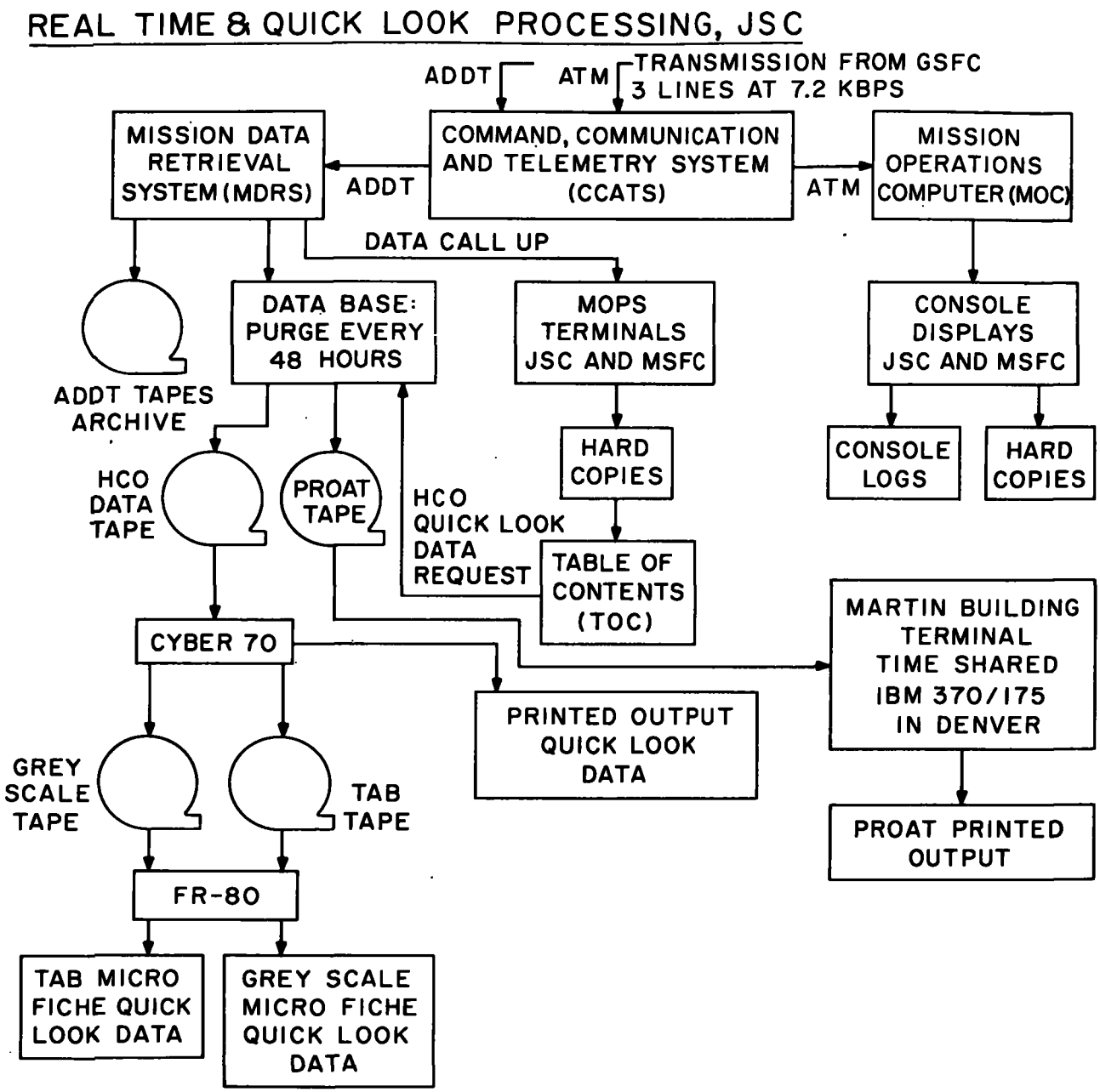

17. Real-time and quick-look data processing, JSC.

as planned and without gross malfunction. Evaluation of scientific data or detection of subtleties in performance was not possible from real-time data displays. Limited voice communication was used primarily to communicate with other solar experimenters and NASA flight controllers. The room next to the ATM Science Room contained the NASA experiment support team, video recorders, additional console and monitoring capabilities, and the keyboard for formulating and sending remote commands to the experiment.

Any video display (Hα 1 and Hα 2, SO52 white-light coronagraph, SO82B XUV slit, and XUV monitor) appearing on one of the two on-board monitors could be recorded by the crew or transmitted to the ground in real time during certain station passes over the United States. At times, by this means, ground support personnel could observe and evaluate the same solar displays that the crew were seeing in performing their observations.

4.2 Quick-Look Data

Scientific and engineering data from the experiment (see Figure 17) were processed by NASA through computers in the real-time computer complex at JSC within a few hours of every station pass (see section 1) and stored in the data bank for approximately 24 hours. HCO support personnel selected 15-minute portions of scientific data from every orbit, to be extracted from the data bank and produced in the following formats:

1) Tabulated spectral or raster data (referred to as "tab") on paper and on microfiche.
2) 64-level grey-scale raster pictures on microfiche.
3) Spectral or raster data on magnetic tape, 2 orbits/day.

The last received further processing by the computer program for UV profile analysis (PROAT), to evaluate changes in instrument sensitivity, the correspondence of wavelength to step number, and spectrometer UV profiles. Data were obtained on tape for entire orbits during special sequences: Calroc JOP 12, Building Block 26, and transit of Mercury, for example.

Engineering parameters (temperatures and voltages) and detector counts were also available in near real-time through the mission data retrieval system (MDRS) and its terminals in the Mission Control Center. Specially designed displays and hard copy formats were available with time intervals and sampling rates to be specified by the requesting engineer. This capability was indispensable for investigating malfunctions, as the necessary data were usually available within one hour of the data dump at a remote site.

4.3 Final Data

Final scientific and engineering data were processed by NASA and received at HCO throughout most of 1974, and the first half of 1975.

The principal final data are:

1) Scientific user tapes: all instrument data other than housekeeping.
2) Tabulated data (tab) on microfiche.
3) 64-level grey-scale raster pictures and line-scan data on microfiche.
4) Engineering data tapes: Spacecraft engineering data and HCO instrument data other than detector counts.
5) Engineering data books: tapes of orbit-by-orbit instrument modes and operations.

The scientific user tapes (SUT) of MSFC are identified by day, batch, and tape number, a batch being 6 hours and comprising one, two, or three tapes. Those of JSC are identified by day and tape number. The final scientific microfiche are produced by running the tapes (backcoated) through a CDC 6400 or a Cyber 73 to produce an input tape for the FR80 microfiche machine. The FR80 output is film. From each SUT there is one film for grey-scale pictures, and another for tabulated data, including spectral scans, rasters, and mirror line scans. The FR80 output is the original and is stored in a warehouse. Copies made from it are used at HCO and NSSDC for data analysis and photographic reproduction.

Figures 18 and 19 illustrate the data processing systems used by NASA to extract final S055 data and convert them into the formats required by HCO. All microfiche output was produced at JSC. Scientific user tapes for days 197-202 (July 16-21, 1973) and 234-290 (Aug. 22 - Oct. 17, 1973) were produced at JSC from analog data. All other SUTs were produced at MSFC; all-digital data tapes (ADDT) were used after day 275 (Oct. 2, 1973), and analog range tapes prior to day 275. The analog range tapes were used for the earlier data because of the excessive drop-outs (both quantity and duration) in the ADDT. HCO engineering data tapes and other ATM experiment data were produced from ADDT after day 234 (Aug. 22, 1973) and from analog range tapes before then.

4.4 Microfiche

The microfiche is available in grey-scale pictures and tabular format, either in roll form or cut up for use. The microfiche originals and copies and their locations are listed

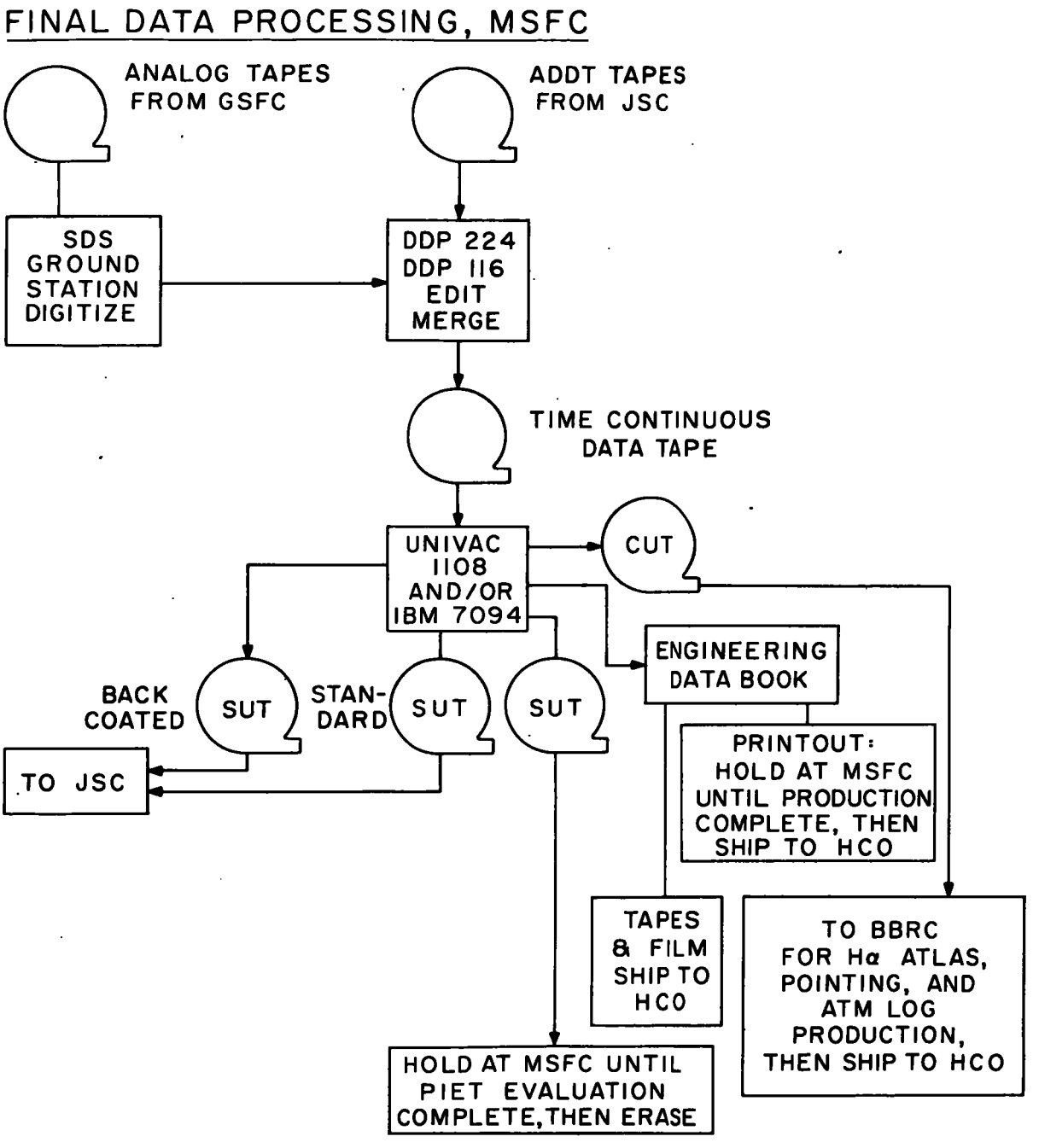

18. Final data processing, MSFC.

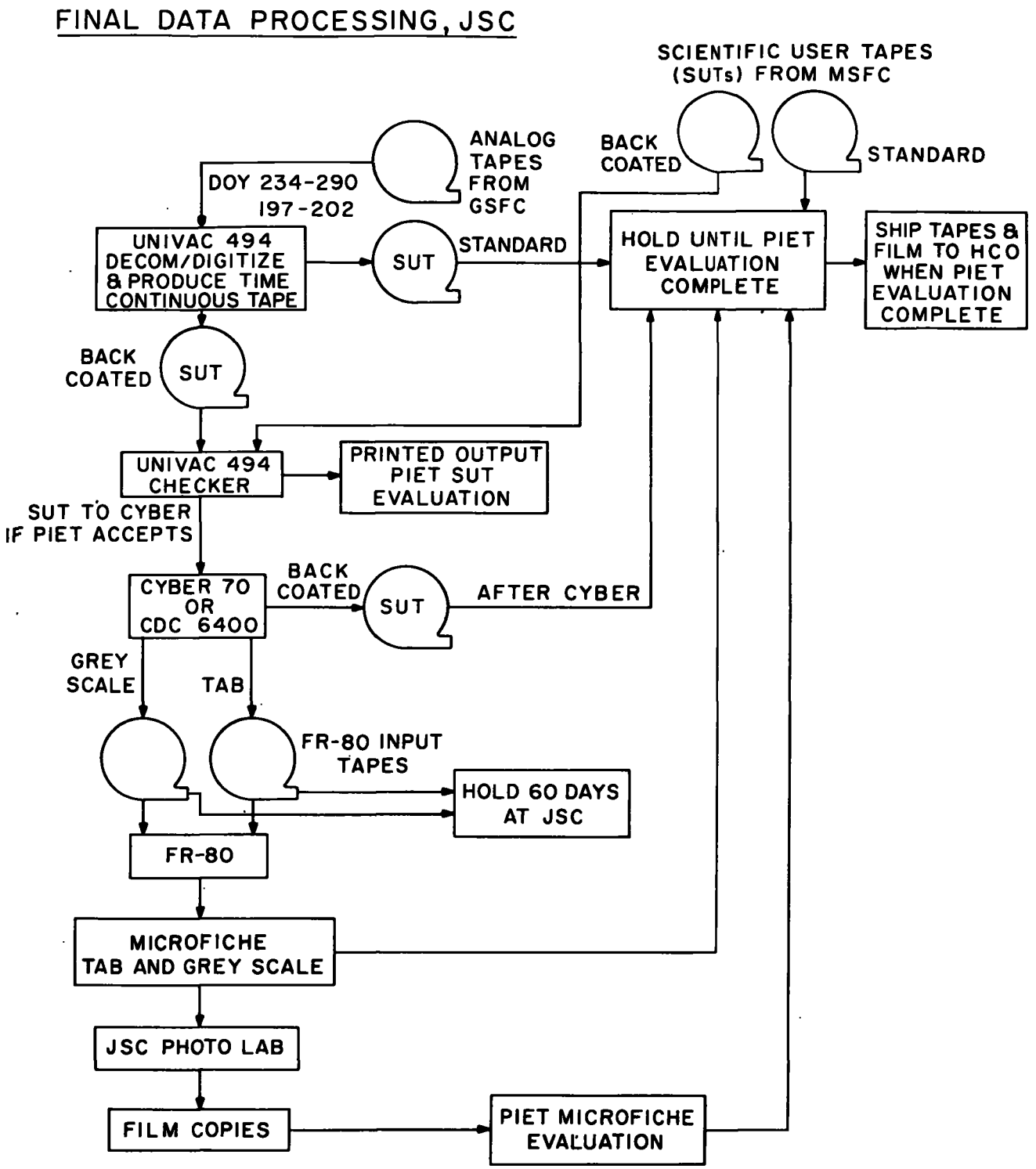

19. Final data processing, JSC.

in the appendix. The following sections (4.4.1-4.4.10) present a description of the microfiche and its formats. The tab microfiche is illustrated in Figure 20, and the grey-scale microfiche in Figure 29. Figures 21 through 28, 30 and 31, illustrate the various microfiche formats in detail.

4.4.1 Raster tab (Figure 21). One tab for each detector that is on. The tab is in four parts:

Lines 1-30,	data samples 1-60
1-30,	61-120
31-60,	1-60
31-60,	61-120

The first 6 and last 6 data samples on each raster line, which appear on the SUT, do not appear on the tab. The heading information indicates the following:

GMT: Doy and time of start of raster.

SO55 RASTER TAB P-1: Page 1 of the 4-page tabulation.

DET 1: Detector number one.

FSSUD 153: ATM fine sun sensor up/down pointing coordinate, in arc sec, at time of start of raster.

GAMRR-8090: ATM roll coordinate, in arc min, at time of start of raster.

CYCLE 325: The number of day/night cycles since the last launch.

REF SEL OPT: The grating reference selected at time of start of the raster.

OPT OUT: The optical reference-bit indication is off.

MECH OUT: The mechanical reference-bit indication is off.

SAMPLE NO. 1: The first of the set of points used to create this file is the first data sample belonging to this file.

MODE/MAR: The mode selected at start of the raster is the mirror auto-raster.

FSSLR 406: The ATM fine sun sensor left/right coordinate, arc sec, at time of start of raster.

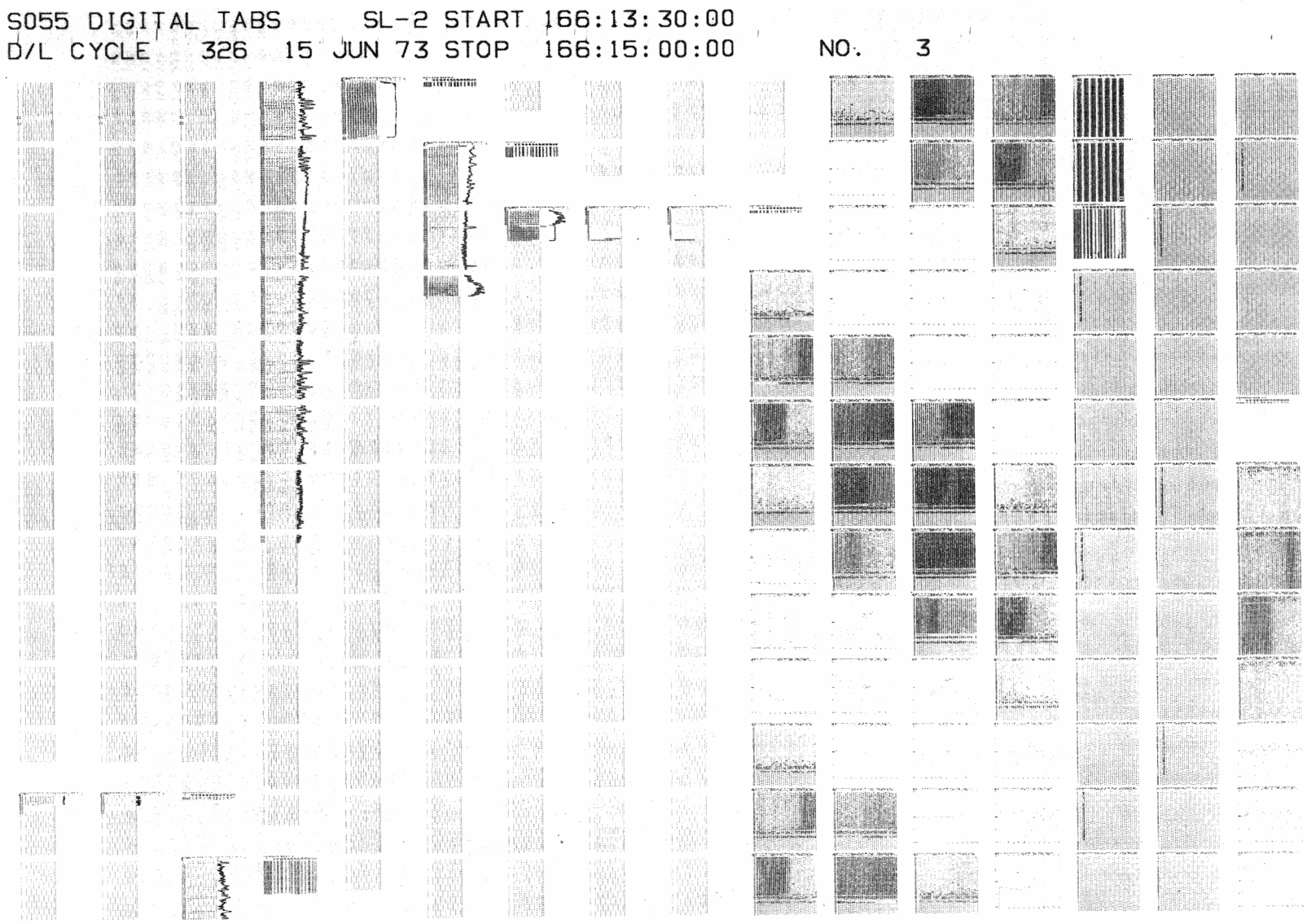

20. Tab microfiche.

GMT 186:12:18:14.249 S055 RASTER TAB P-1 DET 1 FSSUD 153 GAMRR -8090 CYCLE 325 REF SEL: OPT OPT OUT MECH OUT
SAMPLE NO. 1 MODE MAR FSSLR 406 GRTPOS 1420 N 7200 IBAR 105 ISQR 25989

	1	2	3	4	5	6	7	8	9	10	11	12	13	14	15	16	17	18	19	20	21	22	23	24	25	26	27	28	29	30
120	38	51	61	49	33	50	109	95	46	83	78	51	44	34	72	67	136	136	277	374	166	283	283	323	170	89	64	63	84	64
119	21	38	55	38	20	51	92	88	47	68	95	65	31	36	122	108	158	188	324	302	166	315	294	289	148	56	35	74	91	51
118	12	20	38	77	24	25	42	82	65	46	89	53	32	62	241	245	210	185	260	210	119	254	288	212	138	45	32	46	70	48
117	27	24	30	49	24	11	31	70	73	45	49	56	40	125	306	376	307	269	245	132	87	232	271	255	202	81	59	30	67	37
116	18	32	26	24	22	14	24	37	66	35	50	44	68	93	330	430	329	325	147	52	64	191	285	286	214	77	68	78	113	92
115	21	16	28	21	36	17	19	30	45	25	54	80	71	115	189	263	204	184	80	42	22	158	276	238	177	135	124	127	194	165
114	49	21	38	58	45	19	15	12	18	23	39	93	81	104	128	137	102	125	46	12	22	90	290	257	173	125	127	163	249	153
113	44	26	75	140	92	25	7	13	9	13	22	81	113	82	75	73	60	57	32	25	25	114	332	348	208	67	76	214	228	131
112	44	49	100	143	59	44	25	8	13	20	20	57	107	65	48	51	55	54	48	22	42	179	367	363	182	58	79	181	285	130
111	48	39	59	85	49	44	29	14	10	22	18	42	82	80	62	43	44	59	45	41	76	209	330	282	152	68	54	190	251	182
110	37	48	21	46	35	29	18	16	15	15	24	24	39	79	66	26	27	41	43	80	102	222	286	201	97	60	58	155	262	201
109	16	15	9	9	30	26	18	24	17	12	20	16	32	49	50	29	21	27	24	58	104	207	227	174	82	86	59	81	212	208
108	13	12	31	38	44	32	26	26	24	28	41	50	73	73	63	29	25	18	27	49	93	150	141	122	81	104	55	62	186	196
107	28	19	34	31	44	73	33	21	75	57	85	147	189	130	138	34	16	43	36	74	84	130	82	93	47	98	75	85	85	128
106	40	21	37	46	54	67	31	42	174	130	155	201	287	178	154	47	23	36	40	51	119	143	59	50	35	104	143	60	39	73
105	69	59	47	30	30	33	37	78	321	252	178	247	234	131	108	49	16	59	42	57	111	148	42	36	26	105	116	47	35	43
104	117	81	65	48	33	24	32	158	342	320	196	216	204	77	122	35	23	30	29	52	126	187	43	28	23	56	99	35	22	42
103	195	150	87	40	30	34	38	185	285	308	182	180	106	70	108	43	24	27	25	39	144	133	35	25	18	25	73	42	23	21
102	313	141	98	38	40	32	33	168	193	175	185	192	94	64	55	42	49	34	24	33	143	88	48	27	21	18	68	43	51	28
101	370	134	124	44	33	33	68	154	151	164	161	159	95	45	37	51	61	63	46	29	154	96	56	42	14	6	28	59	65	35
100	373	147	90	57	50	60	181	190	242	185	190	98	76	48	31	50	93	181	123	40	118	89	81	31	12	8	32	70	98	90
99	356	173	97	37	67	107	338	219	426	281	257	142	95	48	26	54	145	382	252	54	99	87	71	27	18	20	42	91	73	94
98	386	175	112	66	134	192	444	310	410	309	286	179	125	70	67	47	194	466	249	84	41	70	68	35	26	40	23	90	93	128
97	446	185	167	183	172	271	474	449	333	342	279	157	116	143	76	78	185	322	148	53	32	53	58	41	40	51	39	97	87	149
96	477	200	289	298	207	381	526	574	440	352	242	135	124	145	55	74	151	120	115	38	27	48	51	53	37	72	67	61	152	158
95	578	348	354	273	191	433	615	482	525	284	412	178	108	97	83	91	95	81	66	72	42	50	56	56	75	81	139	100	239	250
94	842	442	218	112	174	348	614	461	551	422	482	244	170	102	73	53	70	67	43	65	30	34	47	88	120	114	217	178	383	387
93	872	347	174	157	204	235	524	506	815	527	618	321	228	155	113	72	67	40	44	62	20	38	61	98	141	154	286	298	429	513
92	235	262	173	175	158	243	418	594	865	675	886	458	314	186	139	72	43	38	41	47	18	26	75	166	185	198	379	438	487	521
91	231	190	221	224	210	233	373	588	599	762	987	830	283	199	159	56	45	37	45	53	16	38	120	187	272	332	424	550	462	476
90	327	257	212	220	212	261	372	643	572	527	689	714	361	270	132	64	54	40	32	58	18	68	187	82	283	405	306	405	424	324
89	462	353	219	110	131	240	239	495	520	391	445	517	344	183	118	98	73	81	56	41	21	119	199	71	345	397	217	234	357	303
88	485	408	230	104	113	186	252	316	623	396	484	457	253	156	128	114	158	148	186	44	30	135	138	49	256	340	162	185	312	231
87	387	344	180	131	140	239	292	311	608	543	481	374	173	94	57	124	248	272	275	118	62	118	108	81	212	223	137	177	204	128
86	477	245	186	147	215	283	295	250	564	544	382	299	221	68	51	112	210	324	244	161	96	80	119	103	184	145	104	194	191	94
85	504	228	195	180	102	245	198	231	542	462	348	233	243	79	51	72	158	216	235	253	146	63	118	131	159	115	121	190	119	70
84	455	216	195	77	71	155	205	206	525	285	330	219	213	87	49	79	169	289	277	302	267	84	102	137	169	100	110	97	80	34
83	452	311	322	125	116	165	355	313	500	224	324	246	154	101	68	98	166	264	382	402	241	139	104	111	148	141	80	41	20	29
82	452	542	688	277	207	255	463	550	581	317	330	272	186	96	69	102	119	279	430	398	215	131	86	111	115	150	43	21	15	19
81	391	-103	-109	631	423	445	483	680	674	462	339	277	180	62	60	68	139	309	420	311	202	99	86	114	133	114	37	29	17	21
80	360	-128	-116	816	678	528	518	626	693	538	442	259	135	91	40	68	120	293	413	251	129	70	57	74	80	72	24	15	14	12
79	379	988	-102	989	777	447	480	734	730	561	416	195	122	84	55	38	118	208	376	148	86	62	62	66	55	80	37	32	22	18
78	328	513	791	-114	-103	420	389	790	680	857	401	204	177	81	72	49	157	190	381	143	94	49	51	67	60	85	58	59	30	20
77	368	344	510	-110	850	338	276	692	694	641	411	187	146	61	68	81	158	215	322	152	73	43	60	47	75	69	110	52	23	25
76	273	241	421	838	673	369	327	633	735	857	380	170	102	51	72	78	179	246	283	120	66	63	58	45	74	58	92	53	19	31
75	264	253	239	500	728	609	556	567	811	578	452	223	100	72	84	146	171	378	320	146	38	45	35	43	111	94	80	40	16	31
74	341	265	134	209	721	783	686	703	847	684	555	175	124	146	154	217	304	411	380	105	52	43	27	44	103	112	84	31	19	52
73	425	274	160	331	525	495	591	913	870	834	884	234	213	231	226	253	329	380	343	101	68	40	33	45	84	146	54	24	45	62
72	585	465	300	380	405	305	484	898	681	807	537	293	261	271	293	257	386	373	345	97	57	38	52	46	155	186	38	39	90	97
71	536	677	540	469	347	304	401	784	462	584	292	278	245	248	352	301	392	423	343	114	59	51	58	33	188	211	47	98	186	81
70	496	513	594	456	360	299	388	713	518	393	171	241	171	181	227	263	416	607	298	119	92	94	75	66	206	212	86	132	170	92
69	458	317	507	400	473	481	390	432	680	284	213	238	136	110	148	215	433	707	290	149	145	160	171	135	234	169	100	151	250	103
68	265	357	406	435	629	547	269	282	607	335	357	392	183	92	119	236	388	464	279	202	248	297	272	181	173	111	77	194	231	114
67	212	322	298	437	588	501	195	261	505	539	450	394	162	85	114	161	329	263	384	227	416	358	170	97	81	78	82	195	200	137
66	123	240	453	363	277	280	112	218	313	494	443	394	187	110	86	152	218	300	486	373	527	302	98	86	35	51	78	216	153	111
65	124	289	850	397	184	175	127	145	161	381	330	304	143	89	139	124	148	334	415	587	342	122	84	58	28	43	109	203	132	72
64	174	380	850	612	172	140	133	120	116	157	249	269	145	101	106	88	107	312	211	601	238	98	88	54	24	38	149	142	75	87
63	266	379	551	923	161	181	125	120	112	114	191	143	109	98	100	85	110	259	178	319	204	119	100	46	35	75	195	117	76	74
62	314	332	349	471	130	130	111	123	99	96	119	84	58	58	72	80	145	210	180	164	192	166	88	49	52	89	172	105	58	53
61	352	224	185	269	139	102	85	108	125	92	86	67	51	58	91	124	182	203	148	144	225	164	100	72	58	106	127	93	71	43

21. Raster tab.

GRT POS 1420: The number of steps the grating was moved from the selected reference at time of start of the raster.

N 7200: The number of good data samples in the raster.

IBAR 105: The average of the good data samples in the raster.

ISQR 25989: The average of the squares of the good data samples in the raster.

In Figure 21, the heading runs across the top of the page; the raster line numbers 1 through 30 run from left to right under the heading. The data sample numbers 61 through 120 run from bottom to top along the left-hand side of the page. The remaining 1800 numbers in Figure 21 are the individual data values for lines 1 through 30 and data samples 61 through 120 along the line. If the detector was off a "-1" is used. When filled data exist, a "-0" is used. For each data value there is a leftmost character indicating order of magnitude, as follows:

value $\leq$ 999	blank
999< value $\leq$ 9999	-
value > 9999	=

4.4.2 Line tab (Figure 22). There is one tabulation for each detector that is on. The tab is in four parts and contains up to 60 line scans of the mirror:

Page 1	lines 1-60,	data samples 1-30
Page 2	lines 1-60	31-60
Page 3	lines 1-60	61-90
Page 4	lines 1-60	91-120

As in the raster tab, the first 6 and last 6 data samples on each line scan, which appear on the SUT, do not appear on the tab. The heading information has the same meaning as for the raster tab (see section 4.4.1), except for the following:

```
 *GMT 168:14:12:17.935   5055 LINE TAB P-4 DET 5  FSSUD  -300  GAMRR -10226   CYCLE     326 REF SEL: MECH OPT OUT MECH IN
SAMPLE NO.     1                                MODF MLS FSSLR  -300                          ORIPOS      1 N 5101 IBAR  2041 ISQR   17292101
   YPOS   91  92  93  94   95  96  97  98  99 100 101 102 103 104 105 106 107 108 109 110 111 112 113 114 115 116 117 118 119 120

   0.3  294 207 157 107   78  90  -1  -1  -1  -1  -1  -1  -1  -1  -1  -1  -1  -1  -1  -1  -1  -1  -1  -1  -1  -1  -1  -1  -0  -0
   0.4  279 208 144  92   88 143 212 304 327 281 183 119  88  80  70  48  50  30  19  46  49  49  50  44  43  38  32  49  53  66
   0.4  287 265 151 108  102 129 234 297 345 287 193 149  95  72  67  52  34  33  39  40  47  42  40  53  64  50  24  38  53  77
   0.0  254 190 131 112   81 146 229 316 317 303 208 125  95  70  49  46  38  33  25  46  47  44  53  51  45  36  38  52  63  69
   0.1  271 224 163 116  108 123 182 277 350 308 260 129  89  77  60  36  41  23  21  52  62  51  64  45  39  38  34  46  45  80
   0.4  233 200 142 119  100 129 221 296 318 288 197 112 107  71  43  44  27  32  33  27  49  61  56  46  34  30  41  70  70  77
   0.3  271 224 132 119   98 113 188 279 352 344 249 129  85  87  75  54  33  33  31  44  49  43  50  51  51  46  37  38  59  89
   0.4  272 197 116 110   88 151 242 352 376 288 183 104  97  76  49  35  43  24  26  40  41  42  47  40  40  35  30  53  70  79
   0.4  287 226 140 115   98 110 197 282 352 303 225 149  80  76  61  50  23  29  34  42  66  44  45  44  51  32  35  46  53  84
   0.3  261 181 128 114   98 135 235 295 331 271 202 111  73  86  67  47  34  36  24  53  58  52  50  46  34  36  43  45  53  88
   0.3  250 224 159 130   96 120 189 256 346 316 238 137  93  78  68  45  29  19  16  33  40  31  54  40  41  28  40  49  56  75
   0.3  261 184 139 117  105 143 219 285 305 287 190 131  85  69  57  34  30  39  45  49  39  35  50  44  28  42  49  40  71  79
   0.4  275 211 155 126  110 108 188 263 339 313 238 142  91  72  57  52  42  36  29  36  41  56  62  47  50  34  41  38  44  72
   0.4  239 191 128 113   93 128 198 316 343 287 195 124  89  71  62  42  21  22  32  43  35  41  45  40  40  41  41  50  64  71
   0.3  302 195 143 118   93 106 181 262 313 320 235 152  91  84  55  43  30  28  26  34  62  49  50  47  42  29  31  41  43  74
   0.1  281 181 141 113   99 131 202 276 303 329 198 138  84  78  50  52  34  35  24  35  52  62  46  39  38  40  35  36  58  84
   0.3  268 227 155 114   94 113 174 245 316 298 238 124  75  74  70  36  30  35  40  43  43  66  43  58  36  42  28  44  53  54
   0.4  256 188 130 102   87 131 203 260 353 285 203 108  78  62  61  39  30  26  28  37  55  57  38  30  34  32  26  38  60  57
   0.3  288 193 173 121  107 136 194 277 301 282 223 127  80  71  66  49  28  44  28  35  60  53  55  40  35  37  43  48  62  78
   0.3  290 163 138 118   86 125 202 270 292 284 202 113  78  54  62  41  24  35  32  54  42  48  41  51  38  50  40  44  61  76
   0.4  307 210 123 128  108 112 187 247 330 316 261 110  90  51  60  39  38  35  20  29  36  34  34  49  39  22  43  46  50  88
   0.3  278 158 136 109  103 126 202 278 294 334 214 113  82  81  52  55  43  19  42  42  42  57  35  58  39  37  47  49  40  69
   0.4  314 222 144 126   96 109 179 236 323 319 244 124  80  78  47  33  29  35  28  47  49  61  44  38  41  32  36  38  49  77
   0.3  283 203 137  90  101 119 205 288 295 329 188 111  77  65  50  27  38  34  41  44  52  38  35  45  34  41  44  49  57  72
   0.4  306 238 156 114   98 115 171 248 313 307 229 157  93  82  63  52  40  37  21  44  41  48  50  47  30  31  28  43  46  85
   0.4  288 182 144 117   96 120 184 298 340 303 223  95  83  78  48  33  38  32  34  52  47  46  56  43  43  30  42  47  58  79
   0.4  304 220 124  88  105  85 192 274 331 379 255 132  85  91  60  44  40  28  32  51  49  39  51  39  43  32  33  40  56  72
   0.1  277 224 138 114   95 128 226 309 388 288 434 118  91  61  54  44  31  38  31  48  56  59  49  38  36  40  39  53  74  79
   0.3  310 247 159 122   86 111 178 255 381 387 246 138  88  80  49  44  27  24  34  48  47  48  46  32  35  37  34  48  47  73
   0.4  284 208 137 107  103 144 226 331 357 329 204 105  84  84  58  48  30  38  41  56  51  48  38  48  35  44  41  50  59  75
   0.3  322 221 136 111  110  94 188 244 380 386 270 117  94  65  42  46  36  41  32  45  55  55  47  42  35  38  53  35  52  72
   0.3  297 208 160 119   88 126 204 310 374 326 212  98  85  64  38  51 100  34  38  38  51  54  35  47  28  54  45  44  67  82
   0.4  314 223 157 123  110  98 188 264 381 406 236 128  88  73  70  36  38  28  34  47  50  49  31  40  31  40  40  35  52  81
   0.3  275 180 133 116   95 127 192 314 382 326 188 128  89  73  64  50 203  29  36  48  35-414  54  37  43  45  33  54  56  91
   0.3  642 234 132 101   87 116 185 288 342 373 230 140  87  75  54  50  40  19  33  48  59  38 115  33  31  32  37  27  67  83
   0.3  260 208 141 121   95 124 218 293 335 037 185 123  88  73  67  42  27  38  30  46  44  52  45  45  31  40  42  37  64  90
   0.6  311 224 182 131  128 132 209 298 303 345 214 121 105  58  58  46  33  25  37  56  53-824  41  47  33  42  33  28  54  77
   0.3   -0  -0  -0  -0   -0  -0  -0  -0  -0  -0  -0  -0  -0  -0  -0  -0  -0  -0  -0  -0  -0  -0  -0  -0  -0  -0  -0  -0  -0  -0
   5.2  304 115 217 124   92 121  -1  -1  -1  -1  -1  -1  -1  -0  -0  -0  -0  -0  -0  -0  -0  -0  -0  -0  -0  -0  -0  -0  -0  -0
   3.4   -0  -0  -0  -0   -0  -0  -0  -0  -0  -0  -0  -0  -0  -0  -0  -0  -0  -0  -0  -0  -0  -0  -0  -0  -0  -0  -0  -0  -0  -0
  28.3  301 222 188 180   83 108 194 267 370 349 211 115  83-110  50-106-413 290  39 594-823  51 288-259  41 100 553  42-210  88
   0.3  338 483-935 183-317 158 218 325 387 288 191 387-443-315-312-838  90-123  55-311-276  43  53-114 357  39-107 181  71-214
   0.4   -0  -0  -0  -0   -0  -0  -0  -0  -0  -0  -0  -0  -0  -0  -0  -0  -0  -0  -0  -0  -0  -0  -0  -0  -0  -0  -0  -0  -0  -0
   7.1   -0  -0  -0  -0   -0  -0  -0  -0  -0  -0  -0  -0  -0  -0  -0  -0  -0  -0  -0  -0  -0  -0  -0  -0  -0  -0  -0  -0  -0  -0
   3.4   -0  -0  -0  -0   -0  -0  -0  -0  -0  -0  -0  -0  -0  -0  -0  -0  -0  -0  -0  -0  -0  -0  -0  -0  -0  -0  -0  -0  -0  -0
   0.3  286-124-329 359-358 191 212 333 387-490 186-190  88 873-889  31 358-831 195 547  24-248-574 570-873-210  42-106-112-126
   0.3  295-382 151 130-127 584-124-844 384-956 193 621 347-823 589-413-112-841 548-423-229-438 183-208  40  41 893 822-122  43
  -0.0   -0  -0  -0  -0   -0  -0  -0  -0  -0  -0  -0  -0  -0  -0  -0  -0  -0  -0  -0  -0  -0  -0  -0  -0  -0  -0  -0  -0  -0  -0
  -0.0   -0  -0  -0  -0   -0  -0  -0  -0  -0  -0  -0  -0  -0  -0  -0  -0  -0  -0  -0  -0  -0  -0  -0  -0  -0  -0  -0  -0  -0  -0
  -0.0   -0  -0  -0  -0   -0  -0  -0  -0  -0  -0  -0  -0  -0  -0  -0  -0  -0  -0  -0  -0  -0  -0  -0  -0  -0  -0  -0  -0  -0  -0
  -0.0   -0  -0  -0  -0   -0  -0  -0  -0  -0  -0  -0  -0  -0  -0  -0  -0  -0  -0  -0  -0  -0  -0  -0  -0  -0  -0  -0  -0  -0  -0
  -0.0   -0  -0  -0  -0   -0  -0  -0  -0  -0  -0  -0  -0  -0  -0  -0  -0  -0  -0  -0  -0  -0  -0  -0  -0  -0  -0  -0  -0  -0  -0
  -0.0   -0  -0  -0  -0   -0  -0  -0  -0  -0  -0  -0  -0  -0  -0  -0  -0  -0  -0  -0  -0  -0  -0  -0  -0  -0  -0  -0  -0  -0  -0
  -0.0   -0  -0  -0  -0   -0  -0  -0  -0  -0  -0  -0  -0  -0  -0  -0  -0  -0  -0  -0  -0  -0  -0  -0  -0  -0  -0  -0  -0  -0  -0
  -0.0   -0  -0  -0  -0   -0  -0  -0  -0  -0  -0  -0  -0  -0  -0  -0  -0  -0  -0  -0  -0  -0  -0  -0  -0  -0  -0  -0  -0  -0  -0
  -0.0   -0  -0  -0  -0   -0  -0  -0  -0  -0  -0  -0  -0  -0  -0  -0  -0  -0  -0  -0  -0  -0  -0  -0  -0  -0  -0  -0  -0  -0  -0
  -0.0   -0  -0  -0  -0   -0  -0  -0  -0  -0  -0  -0  -0  -0  -0  -0  -0  -0  -0  -0  -0  -0  -0  -0  -0  -0  -0  -0  -0  -0  -0
  -0.0   -0  -0  -0  -0   -0  -0  -0  -0  -0  -0  -0  -0  -0  -0  -0  -0  -0  -0  -0  -0  -0  -0  -0  -0  -0  -0  -0  -0  -0  -0
  -0.0   -0  -0  -0  -0   -0  -0  -0  -0  -0  -0  -0  -0  -0  -0  -0  -0  -0  -0  -0  -0  -0  -0  -0  -0  -0  -0  -0  -0  -0  -0
```

22. Line tab.

MECH IN: The mechanical reference-bit indication is on, meaning that the grating is at or near mechanical reference.

GRT POS 1: The grating is one step from the reference selected (mechanical reference).

In Figure 22, where the heading runs across the top of the page, the data sample numbers 91 through 120 (because this is page 4) run from left to right under the heading. The mirror Y position in terms of line number runs along the left-hand side of the page.

4.4.3 Line scan JBAR/COL tab (Figure 23). This tabulation using scientific notation consists of the average of up to 60 data values for each of 7 detectors having the same position along the line scan, i.e., the average of up to 60 data samples. The tab is in two parts:

Part 1	data samples	1 - 60
Part 2	data samples	61 - 120

The heading information has the same meaning as in section 4.4.1.

In Figure 21, with the heading running across the top of the page, the detector numbers 1 through 7 run from left to right under the heading. The data sample numbers 61 through 120 (because this is page 2) run along the left-hand side of the page under the designation COL (column).

4.4.4 Line scan JBAR/COL plot (Figure 24). This output is a printer plot of each JBAR/COL with respect to the mean (average of 120 values of JBAR/COL) for each detector. The abscissae are data samples 1 - 120; the ordinates are ratios of values of JBAR/COL (tabulated as in Figure 23) to the mean. The heading information has the same meaning as in section 4.4.1, with one exception:

MEAN J 1956.5: The average of 120 JBAR/COL values for up to 60 line scans.

*OMT 168:14:12:17.935 S065 LINE SCAN JBAR/COL TAB P-2 FSSUD -308 OAMRR -10228 CYCLE 326 REF SEL: MECH OPT OUT MECH IN

SAMPLE NO. 1 FSSLR -390 ORTPOS 1

COL	DET 1	2	3	4	5	6	7
61	.90000E+02	.39000E+03	.46200E+04	.30050E+04	.64430E+04	.16000E+04	.82300E+03
62	.20800E+03	.28900E+03	.37220E+04	.32420E+04	.67900E+04	.15460E+04	.80100E+03
63	.34400E+03	.17100E+03	.43180E+04	.38270E+04	.85060E+04	.12830E+04	.78100E+03
64	.31500E+03	.29800E+03	.75820E+04	.55950E+04	.77790E+04	.12060E+04	.82700E+03
65	.59400E+03	.60700E+03	.72650E+04	.70890E+04	.87430E+04	.11260E+04	.10830E+04
66	.11170E+04	.12270E+04	.93730E+04	.81100E+04	.87340E+04	.13410E+04	.13540E+04
67	.12060E+04	.12180E+04	.98110E+04	.93330E+04	.10090E+05	.89700E+03	.10720E+04
68	.84900E+03	.84500E+03	.95830E+04	.80710E+04	.99370E+04	.74700E+03	.71900E+03
69	.35000E+03	.26700E+03	.79280E+04	.33870E+04	.72080E+04	.40800E+03	.89200E+03
70	.27600E+03	.32700E+03	.82940E+04	.36050E+04	.93940E+04	.63500E+03	.52900E+03
71	.59900E+03	.77600E+03	.83740E+04	.65210E+04	.98300E+04	.10330E+04	.85400E+03
72	.69200E+03	.87000E+03	.67710E+04	.68240E+04	.11739E+05	.98600E+03	.80400E+03
73	.47400E+03	.52900E+03	.10809E+05	.48800E+04	.98280E+04	.31800E+03	.49500E+03
74	.46400E+03	.38400E+03	.11020E+05	.37850E+04	.73800E+04	.38200E+03	.48700E+03
75	.34600E+03	.43700E+03	.88230E+04	.23790E+04	.48300E+04	.31400E+03	.18800E+03
76	.14400E+03	.16800E+03	.33540E+04	.10100E+04	.19730E+04	.84000E+02	.27800E+03
77	.34000E+02	.28000E+02	.80000E+03	.59200E+03	.84900E+03	.75000E+02	.23400E+03
78	.12000E+02	.31400E+03	.40500E+03	.18300E+03	.81600E+03	.66200E+03	.27700E+03
79	.82000E+02	.22200E+03	.13800E+03	.12900E+03	.49100E+03	.14000E+02	.22300E+03
80	.50000E+01	.55000E+02	.12800E+03	.37800E+03	.74400E+03	.24000E+02	.20200E+03
81	.38000E+02	.21000E+02	.19200E+03	.17900E+03	.75300E+03	.11800E+03	.10000E+02
82	.80000E+01	.56000E+02	.15600E+03	.38100E+03	.81200E+03	.25000E+02	.30800E+03
83	.14800E+03	.18900E+03	.15700E+03	.15800E+03	.80800E+03	.32000E+02	.22600E+03
84	.24400E+03	.24800E+03	.35200E+03	.56400E+03	.55100E+03	.53000E+02	.11900E+03
85	.90000E+01	.17700E+03	.13100E+03	.17200E+03	.65100E+03	.17600E+03	.27500E+03
86	.24000E+03	.13000E+02	.12700E+03	.35400E+03	.81600E+03	.31000E+03	.11500E+03
87	.80000E+01	.14000E+03	.11200E+03	.11000E+03	.51600E+03	.12600E+03	.10000E+02
88	.34000E+03	.80000E+01	.14300E+03	.11300E+03	.71700E+03	.12600E+03	.29800E+03
89	.60000E+01	.20000E+02	.98000E+02	.25500E+03	.46000E+03	.48200E+03	.91000E+02
90	.21000E+02	.15200E+03	.30400E+03	.29400E+03	.34900E+03	.70000E+01	.32200E+03
91	.58000E+02	.20600E+03	.67000E+02	.71000E+02	.29500E+03	.60000E+02	.32200E+03
92	.30000E+01	.30600E+03	.58000E+02	.17300E+03	.52900E+03	.80000E+01	.90000E+01
93	.15000E+02	.53000E+02	.35000E+02	.53100E+03	.45700E+03	.11900E+03	.27400E+03
94	.98000E+02	.31700E+03	.19000E+02	.43000E+02	.12100E+03	.22200E+03	.38000E+02
95	.58000E+02	.32000E+02	.12200E+03	.45000E+02	.26500E+03	.31000E+02	.22200E+03
96	.10000E+01	.65000E+02	.15300E+03	.30200E+03	.12300E+03	.72000E+02	.60000E+01
97	.50000E+01	.20600E+03	.58000E+02	.25800E+03	.19800E+03	.59000E+02	.60000E+01
98	.40000E+01	.24600E+03	.10200E+03	.11600E+03	.28500E+03	.18000E+02	.69000E+02
99	.20000E+02	.48000E+02	.11700E+03	.77000E+02	.34100E+03	.22400E+03	.39000E+02
100	.30000E+01	.31300E+03	.34500E+03	.28800E+03	.44900E+03	.68000E+02	.80000E+01
101	.20000E+01	.55000E+02	.92000E+02	.27500E+03	.22100E+03	.32800E+03	.80000E+02
102	.20000E+01	.57000E+02	.85000E+02	.42000E+02	.17800E+03	.96000E+02	.11900E+03
103	.90000E+01	.26700E+03	.81000E+02	.23800E+03	.19800E+03	.25400E+03	.58000E+02
104	.16700E+03	.41400E+03	.28000E+02	.26500E+03	.19000E+03	.40000E+01	.13000E+02
105	.70000E+02	.24100E+03	.17000E+02	.50000E+02	.38200E+03	.22100E+03	.38300E+03
106	.42000E+02	.77000E+02	.23800E+03	.69000E+02	.28300E+03	.14200E+03	.31000E+02
107	.18000E+02	.97000E+02	.23800E+03	.28000E+02	.15700E+03	.14000E+02	.11900E+03
108	.70000E+02	.18000E+03	.56000E+02	.43000E+02	.56500E+03	.20000E+01	.41000E+02
109	.80000E+01	.24400E+03	.22100E+03	.15000E+02	.35000E+02	.18200E+03	.10900E+03
110	.83000E+02	.37000E+02	.14300E+03	.94000E+02	.14800E+03	.31000E+02	.50000E+01
111	.29000E+02	.29400E+03	.44000E+02	.22400E+03	.32700E+03	.44700E+03	.20000E+01
112	.33700E+03	.13000E+02	.28400E+03	.25100E+03	.42800E+03	.38600E+03	.13300E+03
113	.22500E+03	.68000E+02	.21800E+03	.22100E+03	.20100E+03	.28800E+03	.76000E+02
114	.10000E+01	.51000E+02	.11200E+03	.24000E+02	.15100E+03	.18000E+03	.15000E+02
115	.70000E+01	.52000E+02	.59000E+02	.38000E+02	.28900E+03	.32000E+02	.22000E+02
116	.10000E+01	.60000E+01	.11300E+03	.13000E+02	.92000E+02	.65000E+02	0.
117	.11100E+03	.68000E+02	.21700E+03	.15400E+03	.77000E+02	.68000E+02	.21100E+03
118	.34700E+03	.13000E+02	.80000E+02	.53000E+02	.73000E+02	.26700E+03	0.
119	.90000E+01	.40000E+01	.13200E+03	.12200E+03	.13700E+03	.13800E+03	.21200E+03
120	.50000E+01	.45000E+02	.15000E+02	.13400E+03	.16800E+03	.50400E+03	.23800E+03

23. Line scan JBAR/COL tab.

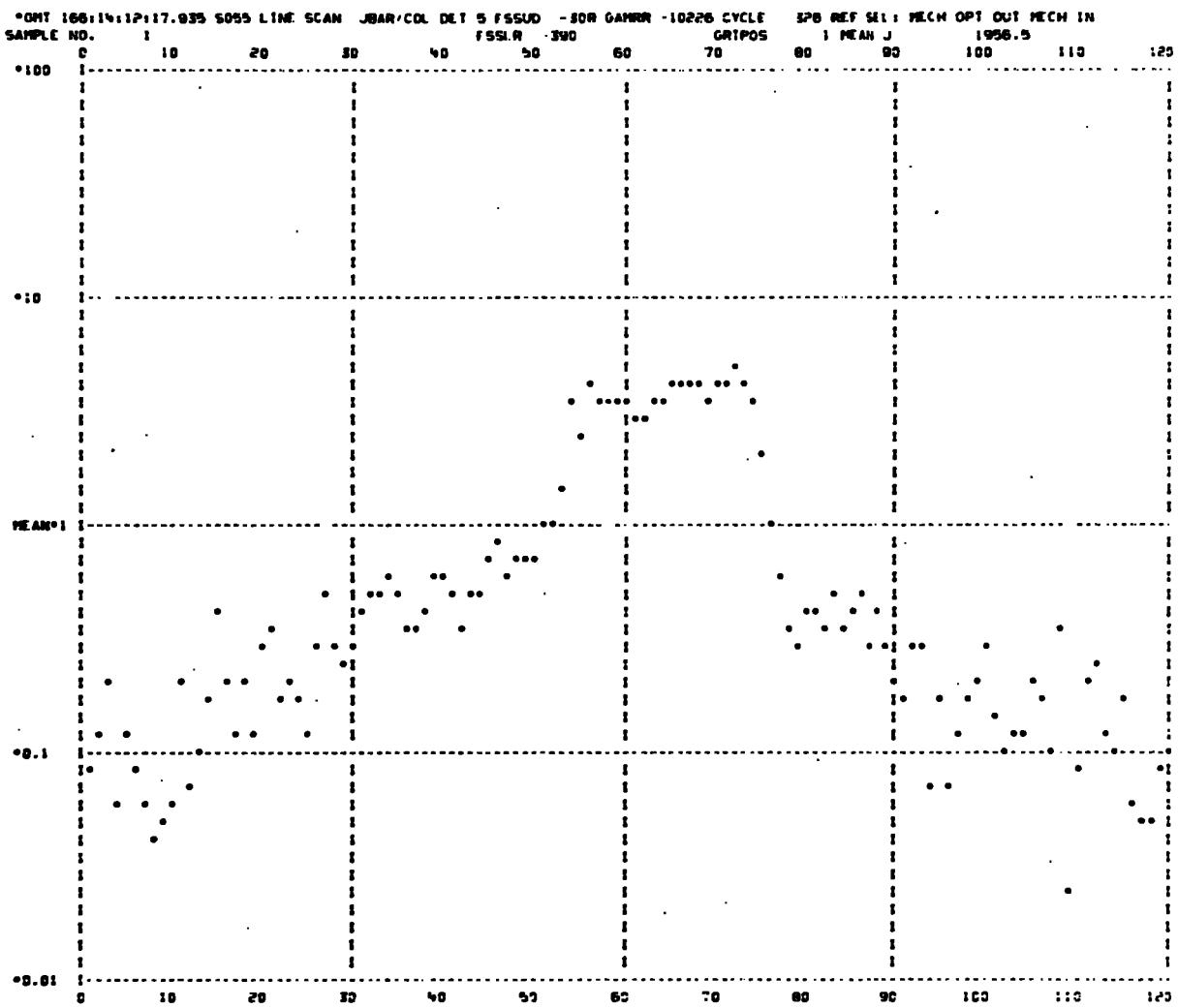

24. Line scan JBAR/COL plot.

4.4.5 Line scan CHISQ/COL plot (Figure 25). A printer plot of each CHISQ/COL with respect to the mean (average of 120 values of CHISO/COL) for each detector that is on for up to 60 line scans. CHISQ/COL (a measure of thedeviation of JBAR/COL from the expected) is calculated from:

$$\text{CHISQ/COL} = \frac{\text{JTEMP} - N(\text{JBAR})^2}{\text{JBAR}}$$

where

$$\text{JTEMP} = \frac{1}{N} \sum_{j=1}^{j=N} A_j^2$$

$$\text{JBAR} = \frac{1}{N} \sum_{j=1}^{j=N} A_j$$

N is the number of lines, with a maximum of 60, used in the file of line-scan data. The heading information has been explained above (see sections 5.5.1 - 4.4.4).

4.4.6 Line scan SQI/LINE plot (Figure 26). A printer plot of each SQI/LINE with respect to the mean (average of up to 60 values of SQI/LINE) for each detector that is on for up to 60 line scans. SQI/LINE (the sum of the squares of the individual intensity values on the line) is calculated from:

$$\text{SQI/LINE} = \sum_{j=1}^{120} A_j^2$$

The abscissae are lines 1-60; ordinates are ratios of values of SQI/LINE to the mean.

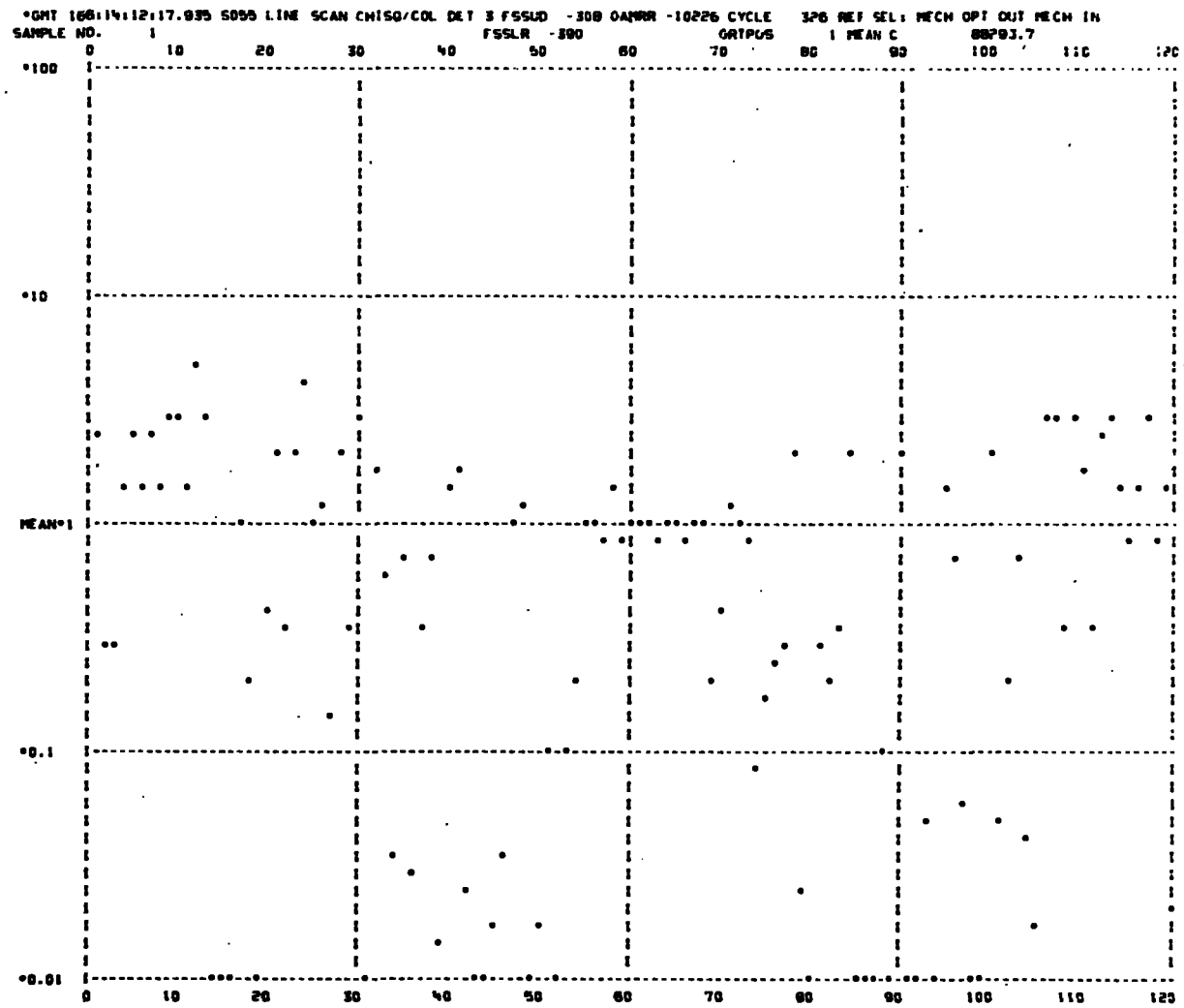

25. Line scan CHISQ/COL plot.

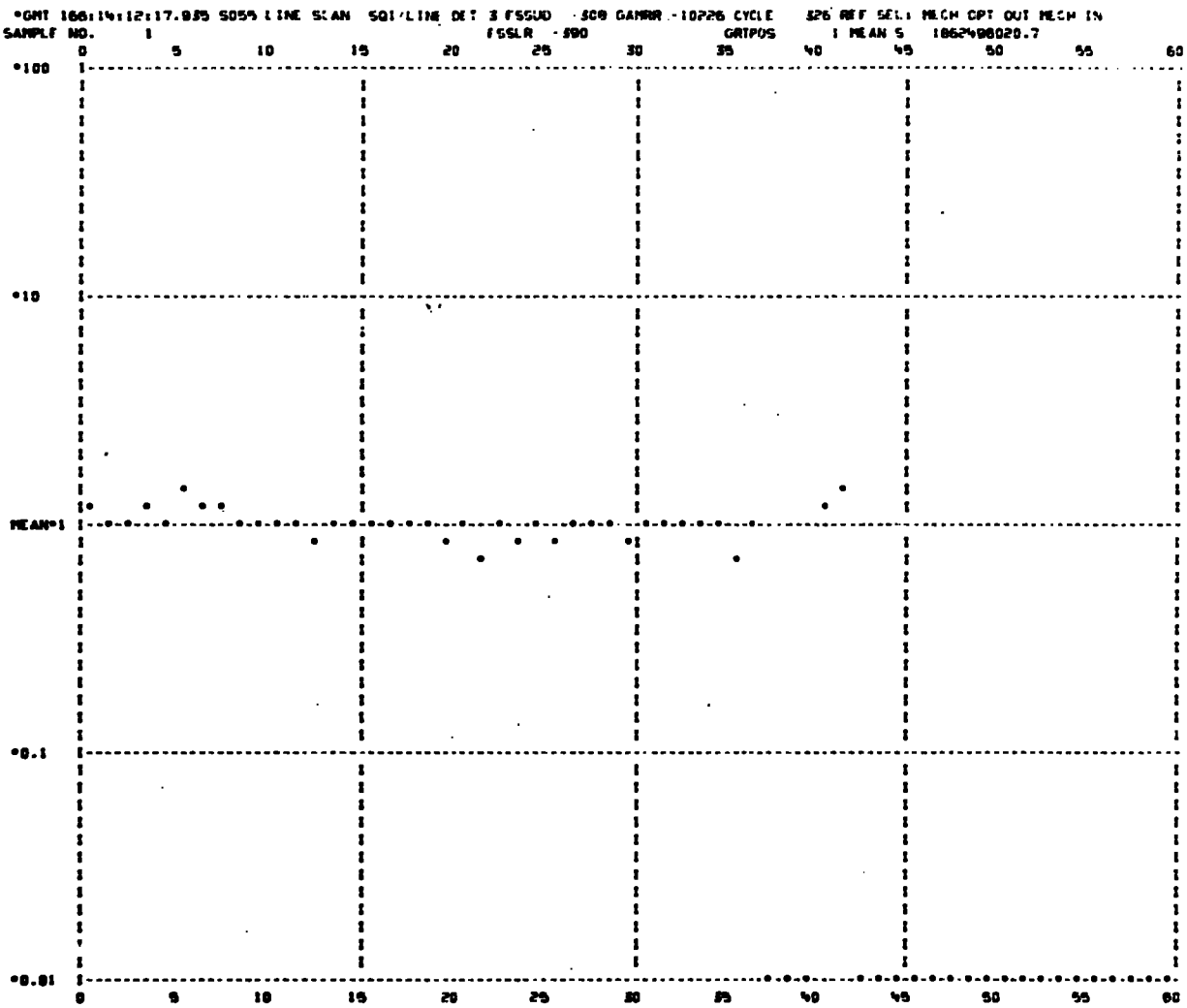

26. Line scan SQI/LINE plot.

4.4.7 Spectral scan tab (Figure 27). The spectral scan data are presented in a combination of tabulation and logarithmic plot. With the heading at the top of the page, the tabulation is on the left-hand side and the logarithmic plot is on the right. The header information was explained in section 4.4.1.

In the tab portion on the left, the grating position (number of steps from the reference selected) is displayed along the left-hand side, running from top to bottom in increasing values (decreasing wavelength at detector 1). Only every 24th grating position is displayed, and it is displayed twice. To the right of each display of grating position appears the mode (GAS, REF). To the right of the mode appear 12 values of detector intensity, which correspond to grating positions

$$n, n + 1, \ldots, n + 11,$$

where n is the grating position displayed on the left. Below them are 12 more values of detector intensity corresponding to grating positions

$$n + 12, n + 13, \ldots, n + 23.$$

To the left of each value of detector intensity a symbol appears which indicates whether there are five digits, or less than five, in the value of detector intensity. The symbol also indicates whether MR is on, OR is on, or neither is on, as follows:

GMT 336:13:54:00.041 S066 SPECTRAL SCAN DET 1 FSSUD -690 FSSLR -122 OAMRR -5360 CYCLE 240 REF SEL: OPT

GRAT SAMPLE NO. 1

POS K256	M	1	2	3	4	5	6	7	8	9	10	11	12
-0		-0	-0	-0	-0	24	20	18	18	19	15	11	19
-0		22	20	27	17	29	21	21	29	15	11	16	24
2474	REF	21	22	26	17	17	16	17	18	21	12	18	16
2474	REF	20	15	23	10	22	16	20	12	22	18	21	13
2498	REF	21	18	20	15	10	28	12	14	21	22	20	13
2498	REF	25	16	22	15	16	11	15	20	8	8	18	21
2522	REF	15	13	17	16	12	18	19	23	19	20	16	16
2522	REF	18	13	20	18	14	23	13	20	11	25	10	15
2546	REF	15	13	15	16	16	12	13	12	18	10	8	18
2546	REF	18	12	10	6	11	14	14	14	21	13	9	17
2570	REF	12	13	16	15	10	10	12	13	11	15	10	16
2570	REF	55	70	115	122	123	124	99	125	72	40	29	14
2594	REF	34	56	65	62	74	55	67	79	64	50	36	33
2594	REF	37	50	24	16	11	13	16	13	10	17	8	9
2618	REF	10	10	16	12	14	11	13	15	18	16	8	11
2618	REF	12	21	34	35	27	32	37	22	22	16	9	12
2642	REF	7	11	9	8	5	5	8	9	10	13	6	11
2642	REF	13	8	15	18	10	3	7	14	14	11	17	10
2666	REF	16	11	7	10	9	14	15	15	13	17	7	12
2666	REF	10	23	32	53	68	42	41	49	52	42	16	11
2690	REF	6	18	6	10	5	7	5	8	7	12	12	8
2690	REF	9	8	15	44	61	62	64	66	66	50	49	27
2714	REF	25	10	10	10	9	11	11	15	7	12	10	12
2714	REF	20	23	12	25	24	31	31	24	18	17	22	11
2738	REF	16	8	15	10	6	9	8	4	3	4	11	6
2738	REF	6	1	6	8	9	13	5	3	5	9	5	10
2762	REF	13	8	13	12	5	11	6	2	0	5	7	8
2762	REF	12	7	17	12	20	9	13	13	13	10	14	11
2786	REF	9	7	5	5	8	9	5	6	8	9	5	8
2786	REF	12	2	9	4	4	11	10	7	7	2	3	3
2810	REF	6	11	6	6	5	3	6	7	7	2	2	5
2810	REF	4	7	5	5	5	5	5	3	6	6	2	7
2834	REF	6	5	4	8	4	10	10	13	17	12	12	11
2834	REF	10	6	13	4	8	6	11	5	4	3	3	5
2858	REF	7	7	1	8	8	5	5	1	8	8	5	6
2858	REF	2	5	6	8	7	5	5	9	7	3	3	5
2882	REF	7	6	6	3	4	9	2	4	2	8	6	2
2882	REF	5	7	6	6	5	4	5	4	4	8	3	10
2906	REF	4	2	3	6	2	6	7	6	3	4	4	8
2906	REF	6	7	1	3	6	8	12	27	21	16	10	17

27. Spectral scan tab.

KO253 (MR)	KO245 (OR)	Value (V)	Symbol
0	0	$\leq$ 9999	blank
0	1	$\leq$ 9999	Z
1	0	$\leq$ 9999	M
1	1	$\leq$ 9999	*
0	0	> 9999	I
0	1	> 9999	Y
1	0	> 9999	N
1	1	> 9999	?

A "-0" for grating position or value of detector intensity indicates that no data are available, or that all 15 bits = 1. A "-1" indicates that the most significant bit = 1.

In the plot output, each of the 12 samples of detector output is plotted sequentially, top to bottom, and evenly spaced with a line drawn between adjacent points. The line is not drawn across invalid samples. The value plotted is restricted to a maximum of 60, according to the equation

$$x = 6\log_e(1 + \text{value})$$

where x = number plotted, and value = detector intensity.

4.4.8 Corollary data (Figure 28). The corollary tab is a status report of engineering data, sampled once per 5 seconds. With the heading running across the top of the page, there are 14 columns of data running from left to right, as follows:

GMT: Time, samples every 5 seconds.

FSSUD GAMY: ATM fine sun sensor up/down coordinate, in arc sec.

FSSLR GAMX: ATM fine sun sensor left/right coordinate, in arc sec.

ROLLRR GAMRR: ATM roll coordinate, in arc min.

UDBIA GMYBI: Up/down pointing bias (NRL), in arc sec.

LRBIA GMXBI: Left/right pointing bias (NRL), in arc sec.

MIRR KO252: Mirror mode (MAR, M3R, MLS, STP).

GRAT KO256: Grating mode (GAS, G3S, REF, SS, STOP).

REFSEL KO254: Grating reference selected (OPT, MECH).

OPTREF KO245: Optical reference IN or OUT.

MCHREF KO253: Mechanical reference IN or OUT.

GRTPOS KO255: Number of grating steps from reference selected.

Y-POS GOO40: Mirror Y position, line number.*

X-POS GOO41: Mirror Y position, step number along line.*

---

* The decimal notation results from the formula used to convert the output voltage of the transducer on the mirror gimbal to line number and step number. The value should be truncated to the nearest whole number.

GMT 166:13:08:13.433 HCO S055 COROLLARY DATA CYCLE 325

GMT	FSSUD GAMY	FSSLR GAMX	ROLRR GAMRR	UDBIA GMYBI	LRBIA GMXBI	MIRR K0252	GRAT K0256	REFSEL K0254	OPTREF K0245	MCHREF K0253	GRIPOS K0255	Y-POS G0040	X-POS G0041
166:13:08:13.433	-377	336	8968	55	20	STP	STOP	OPT	OUT	OUT	615	8.3	31.7
166:13:08:18.433	-377	336	8968	55	20	STP	STOP	OPT	OUT	OUT	615	8.4	31.7
166:13:08:23.433	-377	336	8968	55	20	STP	STOP	OPT	OUT	OUT	615	8.4	31.5
166:13:08:28.433	-377	336	8968	55	20	STP	STOP	OPT	OUT	OUT	615	8.5	31.4
166:13:08:33.433	-377	336	8968	55	20	STP	STOP	OPT	OUT	OUT	615	8.4	31.7
166:13:08:38.433	-377	336	8968	55	20	STP	STOP	OPT	OUT	OUT	615	8.4	31.7
166:13:08:43.433	-377	336	8968	55	20	STP	STOP	OPT	OUT	OUT	615	8.4	31.7
166:13:08:48.433	-377	336	8968	55	20	STP	STOP	OPT	OUT	OUT	615	8.4	31.4
166:13:08:53.433	-377	336	8968	55	20	STP	STOP	OPT	OUT	OUT	615	8.4	31.4
166:13:08:58.433	-377	336	8968	55	20	STP	STOP	OPT	OUT	OUT	615	8.3	31.5
166:13:09:03.433	-377	336	8968	55	20	STP	STOP	OPT	OUT	OUT	615	8.3	31.5
166:13:09:08.433	-377	336	8968	55	20	STP	STOP	OPT	OUT	OUT	615	8.3	31.5
166:13:09:13.433	-377	336	8968	55	20	STP	STOP	OPT	OUT	OUT	615	8.3	31.4
166:13:09:18.433	-377	336	8968	55	20	STP	STOP	OPT	OUT	OUT	615	8.3	31.5
166:13:09:23.433	-377	336	8968	55	20	STP	STOP	OPT	OUT	OUT	615	8.5	31.5
166:13:09:28.433	-377	336	8968	55	20	STP	STOP	OPT	OUT	OUT	615	8.3	31.5
166:13:09:33.433	-377	336	8968	55	20	STP	STOP	OPT	OUT	OUT	615	8.4	31.7
166:13:09:38.433	-377	336	8968	55	20	STP	STOP	OPT	OUT	OUT	615	8.3	31.4
166:13:09:43.433	-377	336	8968	55	20	STP	STOP	OPT	OUT	OUT	615	8.3	31.5
166:13:09:48.433	-377	336	8968	55	20	STP	STOP	OPT	OUT	OUT	615	8.4	31.4
166:13:09:53.433	-377	336	8968	55	20	STP	STOP	OPT	OUT	OUT	615	8.3	31.4
166:13:09:58.433	-377	336	8968	55	20	STP	STOP	OPT	OUT	OUT	615	8.3	31.5
166:13:10:03.433	-377	336	8968	55	20	STP	STOP	OPT	OUT	OUT	615	8.4	31.4
166:13:10:08.433	-377	336	8968	55	20	STP	STOP	OPT	OUT	OUT	615	8.3	31.5
166:13:10:13.433	-377	336	8968	55	20	STP	STOP	OPT	OUT	OUT	615	8.4	31.7
166:13:10:18.433	-377	336	8968	55	20	STP	STOP	OPT	OUT	OUT	615	8.3	31.4
166:13:10:23.433	-377	336	8968	55	20	STP	STOP	OPT	OUT	OUT	615	8.3	31.5
166:13:10:28.433	-377	336	8968	55	20	STP	STOP	OPT	OUT	OUT	615	8.3	31.9
166:13:10:33.433	-377	336	8968	55	20	STP	STOP	OPT	OUT	OUT	615	8.3	31.5
167:00:00:00.000	0	0	0	0	0	STP	STOP	MECH	OUT	OUT	0	0.0	0.0

28. Corollary data tab.

4.4.9 Grey-scale microfiche (Figure 29). The grey-scale microfiche displays variable-density plots of rasters and mirror line scans for each detector that is on during the cycle. The heading displays day/night cycle number, calendar date, and GMT. With the heading at the top of the page, there are up to 77 grey-scale pictures arranged in a matrix of 11 across from left to right with time increasing, and 7 down, with detector number increasing from 1 to 7. If a detector is turned off, the space reserved for its grey-scale picture is left blank. In the heading, the start and stop GMTs are theoretical times of orbit midnight, before and after this day cycle. The "No." (which is blank in Figure 29) gives the number of microfiche for the cycle and is blank unless greater than one.

The raster picture (Figure 30) is made in 64 levels of grey, and has up to 7200 picture elements, consisting of 60 lines and 120 elements on a line. The lines are 5 arc sec apart and the elements are in columns 2.5 arc sec apart to produce a square picture, 5 arc min x 5 arc min. The values of the 7200 data samples, ranging from 1 to 16,393 (see section 2) are divided into 64 grey levels, by the following equation:

$$\mathrm{LEVEL}_{0-63} = \left(\frac{\mathrm{LOG}_{10}\mathrm{I} - \mathrm{LOG}_{10}\mathrm{IBAR}}{\mathrm{DLOG}}\right)_{\mathrm{INT}} + \mathrm{MLVL},$$

where

$$\mathrm{I} = \text{any one of the 7200 data samples; } \mathrm{IBAR} = \frac{1}{N}\sum_{1}^{N} A_{ij}$$

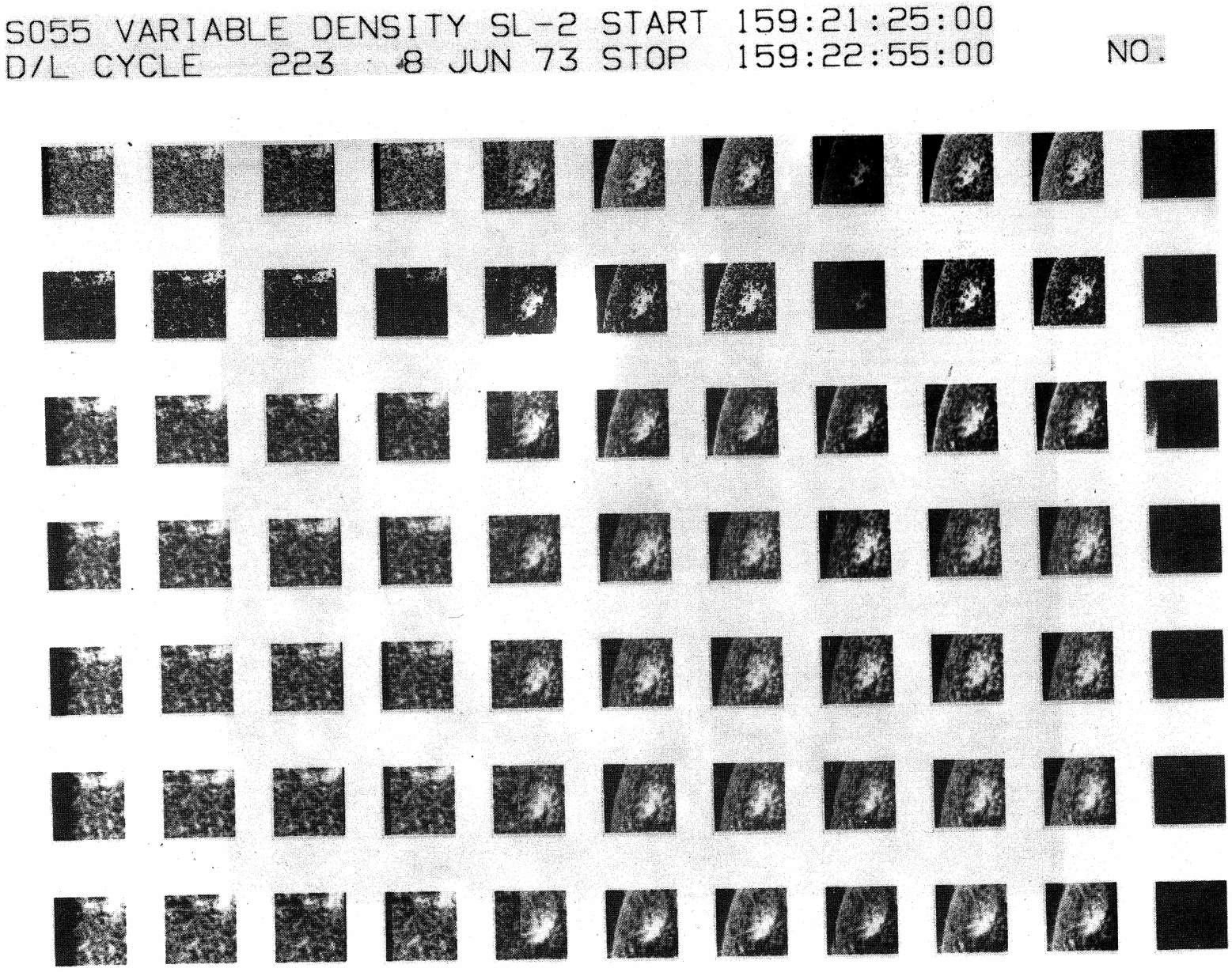

29. Grey-scale microfiche.

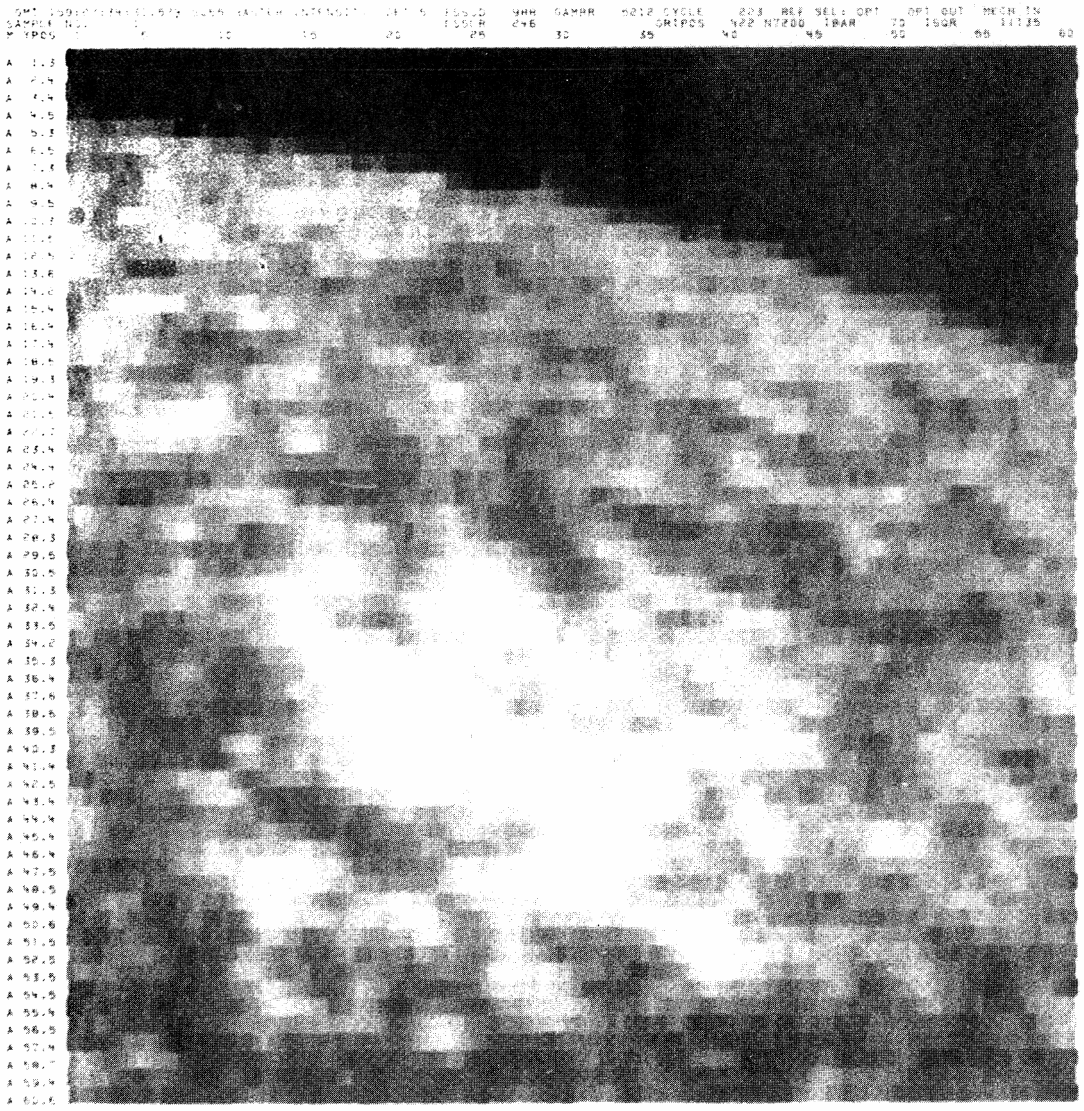

30. Grey-scale raster picture.

= average of all valid data samples in the raster; DLOG=0.035, INT = take integer value and truncate, and MLVL = 32 (midpoint of 64 grey levels).

The heading information is as explained in section 4.4.1. With the heading at the top of the picture, the series of numbers from 1 to 60 indicate location along the raster line of data samples 1 to 120. Mirror Y position, converted to line number, appears on the left-hand edge of the picture and increases from top to bottom (see Figure 4). To the left of YPOS the letter M indicates mode. The series of 60 letters A under the M indicates mirror auto-raster (MAR).

The tape containing the 64 levels of grey is generated on the Cyber 73 from the SUT. The Cyber output tape is input to the FR80 to produce the images on film, and another tape is input to produce the tab microfiche.

In some grey-scale pictures, such as the super raster, a composite has been constructed of the full sun; the midpoint and the grey levels were held constant over all the rasters in the series. In others such as limb rasters, IBAR is small and it was possible to change these values to prevent distortion or to enhance features off the limb. In such cases, different values for MLVL, IBAR, and DLOG were entered by card, and the program used them in the above equation to calculate the level of each picture element.

4.4.10 Grey-scale line-scan picture (Figure 31). The mirror line-scan picture was made the same way as the raster picture. It contains up to 60 lines for a maximum of 7200 data samples, with successive mirror line-scans displaced vertically. The heading information is explained in sections 4.4.1 and 4.4.9. The letter L on the left-hand edge of the frame stands for mirror line-scan.

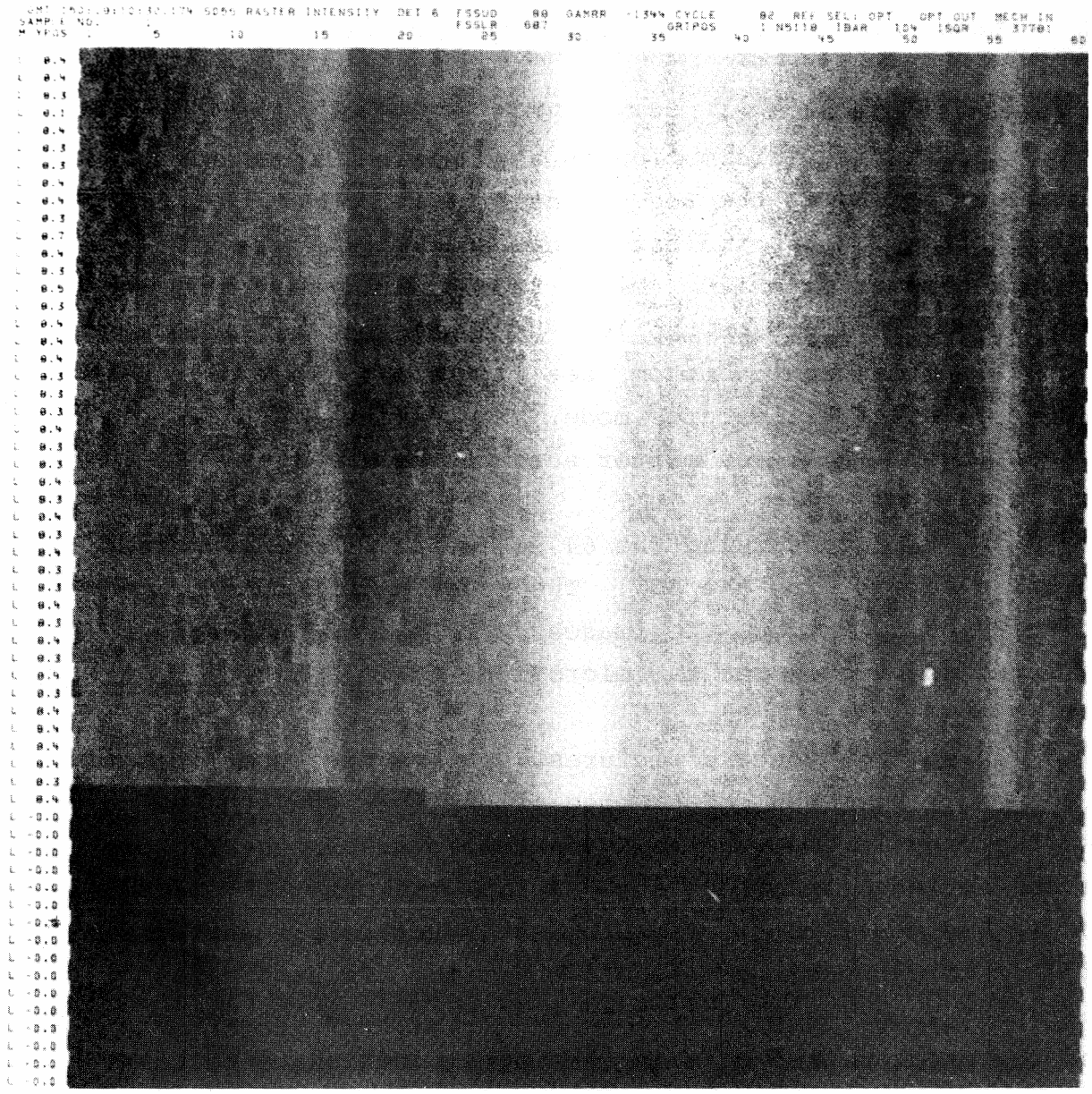

31. Grey-scale line-scan picture.

4.5 Tape Storage

The analog range tapes will be stored at Marshall Space Flight Center through June 31, 1979, by the Computation Laboratory, in a temperature-and humidity-controlled environment. ADDT tapes are stored only when they fill gaps in the analog data or the analog tape has been erased. The remaining ADDT tapes were destroyed during 1975, as the data batches were processed and accepted by ATM experimenters.

The FR80 and Earth Resources Interactive Processing Station (ERIPS) input tapes were stored at Johnson Space Center for a period of 60 days after their use, and were then destroyed. New tapes for processing on the FR80 may be generated at HCO on the CDC 6400 at the Computation Center of the Smithsonian Astrophysical Observatory and sent to JSC if reruns are required. Back-coated tape is required.

Blank page retained for pagination

5. SUPPORTING DOCUMENTS

The following supporting documents for this HCO data handbook have been or are being prepared, available under separate cover, to supplement the S055 scientific data and are in their use.

5.1 *Microfiche and Hardcopy Guide*

This contains detailed instructions in the use and interpretation of quick-look and final microfiche (grey-scale and tab) and printouts. It gives an explanation of the formats, the differences between negative original, 1st generation positive, 2nd generation negative, and 3rd generation positive.

5.2 *Scientific-User Tape Guide*

This gives instructions in the use and interpretation of the scientific user tapes, and describes their format.

5.3 *S055 Mission Log Guide*

This provides a description of the S055 mission log, and instructions for its use, including a description of search routines available. The guide will be periodically updated.

5.4 *Hα Film and Atlas Guide* (July 1975)

This gives a description of the Hα atlas and the Hα 1 films. It includes a description of the Hα telescope with its filter characteristics, a summary of film processing procedures, instructions for use of the atlas and the full sun atlas, instructions for use of the overlays, an explanation of the ATM pointing coordinate system, a summary of Hα atlas coverage, timeline, anomalies, and criteria for atlas print selection.

5.5 *Hα Atlas* (June 1975)

This includes a continuous series of Hα photographs from each cycle of Skylab when the Hα 1 telescope was operating, made from original flight films. The prints, size 8 x 8 inches, 16 x 16 (arc min)^2, show reticles. Overlays give the precise location of S055 and S082B slits. Frame selection criteria: 1 print per 15-minute time or each significant pointing change, at sunrise and at sunset. Data Block gives pointing coordinates, S052 PES coordinates, S082 biases, S055 modes, mirror and grating positions, DOY, GMT, sun remaining time, and cycle. Bound in volumes 8½ x 11 inches. 100 prints each. Full disc atlas, in 2 separate volumes, has one print with sun centered pointing from each day when Hα 1 telescope was operating.

5.6 *Calibration Handbook*

This comprehensive report of S055 calibration includes spatial resolution, ray trace predictions, telescope focus, scattered light, and thermally induced variatons in the telescope. Wavelength calibration includes detector UV profiles

correspondence of wavelength to step number, scan repeatability, detector performance, linearity, changes in instrument sensitivity, dark count. There is also a description of pre-launch photometric calibration in the laboratory, orbital calibration, and Calroc results.

5.7 *Corollary Data Guide*

Lists and describes all supporting data, scientific publications derived from data, instrument corollary reports, NOAA solar data, console log, and missions planning documents. Periodically updated.

5.8 *S055 Experiment Handbook* (July 1972)

Gives a detailed description of the instrument hardware, ground support equipment, and interfaces, with corrections.

5.9 *Pointing Reference Handbook (BBRC TN 74-27)*

A description of S055, ATM, and Skylab pointing coordinates and pointing control system; discusses errors and biases, coalignment procedures, pointing history, and fine sun sensor drift and roll errors between star tracker updates. Description and use of S052 pointing error sensor data.

Blank page retained for pagination

Acknowledgments

The authors wish to thank Frank Kaszynski, Darrel Torgerson, Henry Wadzinski, and George Withbroe for collecting factual material; Beryl Langer, Lola Eachus, and the HCO photo lab for preparing the illustrations; Marybeth Cournoyer and Willa Reiser for typing the manuscript, Lyle G. Boyd for editorial assistance; and others at the Harvard College Observatory who assisted in a variety of ways. The program was funded by NASA under contract NAS 5-3949.

Blank page retained for pagination

References

1. ATM Study Program Final Report, Ball Brothers Research Corp., 1 April 1966.
2. Reeves, E.M., Timothy, J.G., and Huber, M.C.E., The photoelectric spectroheliometer on ATM, presented at SPIE Seminar-in-Depth on Instrumentation in Astronomy-II, Tucson, Arizona, 5 March 1974.
3. Johnson, P.F., Improved Concave Grating Mounting, *Review of Scientific Instruments* 28, 1957, 833.
4. Onaka, R., Grating Mounting for vacuum ultraviolet monochromator, *Science of Light* 7, 1958, 23.
5. Draft technical report, Flight Spare Spectrometer Scan Nonlinearity, Ball Brothers Research Corp., 1 June 1972.
6. Huber, M.C.E. "Rubber-cam" correction procedure, HCO internal memorandum, 17 December 1973.
7. Vernazza, J.E., Wavelength calibration, HCO internal memorandum, 20 November 1975.
8. F70-12, Final Report, Phase I and II, HCO/ATM S055A Program, Ball Brothers Research Corp., 22 November 1971.
9. Huber, M.C.E., Reeves, E.M., and Timothy, J.G., Photometric calibration of an EUV spectroheliometer for Skylab, Proceedings, 9th Congress, International Commission of Optics, Santa Monica, Calif. Oct. 9-13, 1972.
10. Huber, M.C.E., and Timothy, J.G., S055 Scanning polychromator and spectroheliometer, EUV Calibration Test 19001, October 12-15, 1971, Report, Analysis and Critique, Nov. 8, 1971, Harvard College Observatory.
11. Timothy, J.G., Chambers, R.M., d'Entremont, A.M., Lanham, N.W., and Reeves, E.M., A sounding rocket spectroheliometer for photometric studies at extreme ultraviolet wavelengths, *Space Science Instrumentation*, 1, 1975, 17.
12. Reeves, E.M., Noyes, R.W., and Withbroe, G.L.,Skylab and the Sun, 30-34, NASA, July 1973.

Blank page retained for pagination

Appendix I

LIST OF FINAL EXPERIMENT DATA

	Location
A. S055 Data	
1. Scientific User Tapes (SUT)	
No. 1 original, back-coated	HCO Data Bank
2 original, standard	NSSDC
Computer-Center copy	SAO Computer Center
2. Grey-Level Microfiche	
Original, roll, positive*	HCO Warehouse
2nd generation, roll, negative	HCO Warehouse
3rd generation, roll, positive	NSSDC
No. 1 2nd generation, cut, negative	HCO Data Bank
2 2nd generation, cut, negative	HCO Data Bank
No. 1 3rd generation, cut, positive	HCO Data Bank
3. Tabular Microfiche	
Original, roll, negative	HCO Warehouse
2nd generation, roll, negative	NSSDC
No. 1 2nd generation, cut, negative	HCO Data Bank
2 2nd generation, cut, negative	HCO Data Bank
4. S055 Digital Mission Log	
Original tape	HCO Data Bank
No. 1 copy, tape	NSSDC
2 copy, tape	SAO Computer Center
No. 1 Printout	HCO Data Bank
2 Printout	HCO Data Bank
3 Printout	NSSDC
5. Engineering Tapes (Compressed User Tapes, CUT)	
Original	HCO Warehouse
6. Engineering Data Book	
Tapes	HCO Data Bank
16-mm microfilm	HCO Data Bank
Printouts	HCO Data Bank

*Note: Positive has dark letters on clear background. High intensit is lighter. Negative is reverse.

LIST OF FINAL EXPERIMENT DATA (cont.)

	Location
7. Data Book Six (S055 and Hα Engineering Data)	
Plots	HCO Data Bank
Printouts	HCO Data Bank
8. Super Raster (I bar constant) (4 SUTs per set)	
No. 1 Original	HCO Data Bank
No. 2 Copy	NSSDC
No. 3 Copy	SAO Computer Center
Grey-level microfiche:	
Original, roll, negative	HCO Warehouse
2nd generation, roll, negative	HCO Warehouse
3rd generation, roll, positive	NSSDC
No. 1 2nd generation, cut, negative	HCO Data Bank
No. 2 2nd generation, cut, negative	HCO Data Bank
No. 1 3rd generation, cut, positive	HCO Data Bank
No. 2 3rd generation, cut, positive	HCO Data Bank
B. Calibration Rocket Data	
1. Flight Data Tapes	
Originals, 2nd and 3rd Calroc	HCO Data Bank
2. Scan Tapes	
No. 1 Scan tapes (in process)	HCO Data Bank
No. 2 Scan tapes (in process)	SAO Computer Center
No. 3 Scan tapes (in process)	NSSDC
C. Hα Telescope Data	
1. Original Film, 35-mm, negative**	
SL 2, 1 reel	HCO Data Bank
SL 3, 2 reels	HCO Data Bank
SL 4, 2 reels	HCO Data Bank
2. Second Generation Master, 35-mm, Data Block Decoded, Positive	
SL 2, 1 reel (limb and disc skip printed)	HCO, Harvard Trust Company
SL 3, 2 reels (limb and disc skip printed)	HCO, Harvard Trust Company
SL 4, 2 reels (limb and disc skip printed)	HCO, Harvard Trust Company

**Note: Negative has dark sun on clear background. Higher intensity is darker. Positive is reverse.

LIST OF FINAL EXPERIMENT DATA (cont.)

	Location
3. 3rd Generation Copies, Negative	
SL 2 limb, 1 reel, positive, 16-mm disc, 1 reel, positive, 16-mm SL 2 limb, 1 reel, negative, 35-mm disc, 1 reel, negative, 35-mm SL 3 limb, 2 reels, negative, 35-mm disc, 2 reels, negative, 35-mm SL 4 limb, 2 reels, negative, 35-mm disc, 2 reels, negative, 35-mm	HCO NSSDC Principal Investigator
4. Contact Copies of Original	
SL 4, 2 reels, positive, 35-mm	HCO Data Bank
5. Atlas	
8 x 8 (arc min)^2 atlas: SL 2, 7 volumes SL 3, 20 volumes SL 4, 20 volumes	HCO Data Bank NSSDC Principal Investigator
Full sun atlas: SL 2, 3, 4, in two volumes	
6. Video Recordings	
TV transmission downlink from Skylab recorded at JSC (1/2 inch video tape)	HCO Data Bank