NRL/ATM
THERMAL DISTORTION PROGRAM
USER'S MANUAL

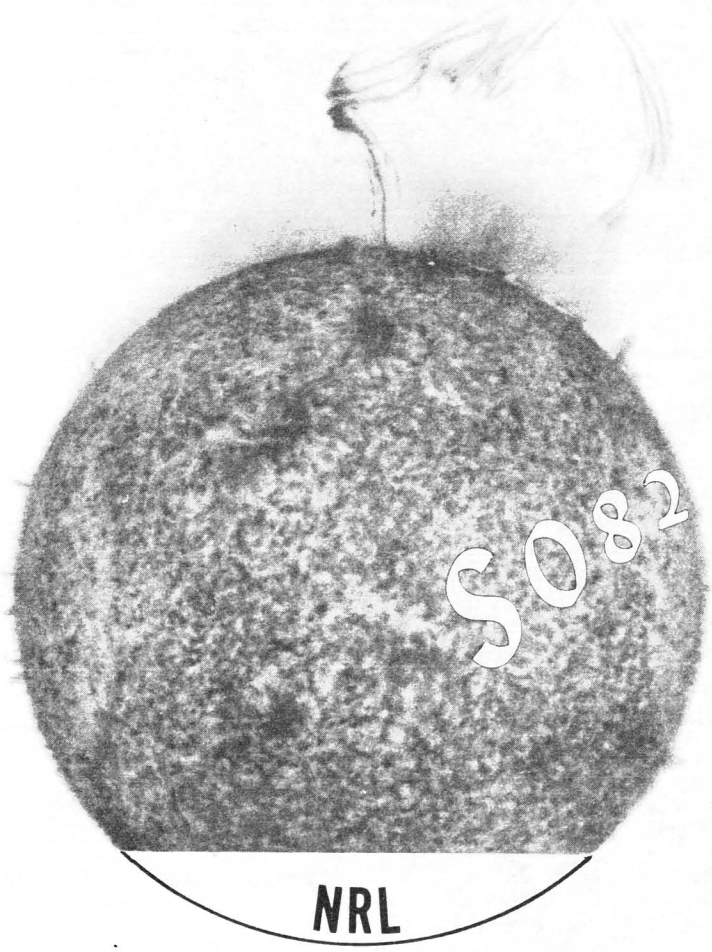

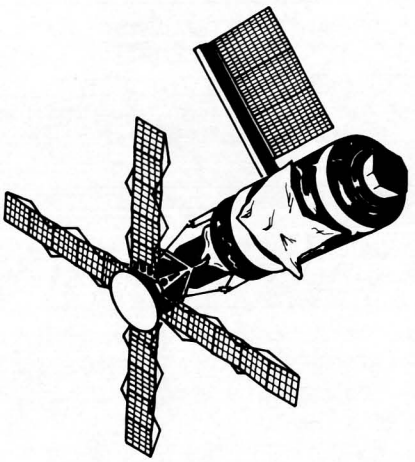

VOLUME I

THERMAL DISTORTION ANALYSIS

PREPARED FOR

UNITED STATES NAVAL RESEARCH LABORATORY

WASHINGTON, D.C.

BALL BROTHERS RESEARCH CORPORATION

SUBSIDIARY OF BALL CORPORATION

BOULDER, COLORADO

A HUGE ERUPTION FROM THE SURFACE OF THE SUN SEEN IN THE LIGHT OF HE II AT 304Å

9 AUGUST 1973

This photograph, obtained during the Skylab 3 Mission, reveals for the first time that helium erupting from the sun can stay together to altitudes up to 500,000 miles. After being ejected from the sun, the gas clouds seem to have come to a standstill, as though blocked by an unseen wall, and some material appears to have been directed back toward the sun as rain, distinguished by fine threads. At present it is a challenge to explain this mystery — what forces expelled these huge clouds, then blocked its further progress, yet allowed the cloud to maintain its threads. Both magnetic fields and gravity must play a part, but these curious forms seem to defy explanation based on magnetic and gravitational fields alone.

The instrument which produced this image was an extreme ultraviolet spectroheliograph, designed and constructed by the Naval Research Laboratory and the Ball Brothers Research Corporation under the direction of Dr. R. Tousey, the Principal Investigator for this NASA experiment. To the left may be seen the sun's image in emission from iron atoms which have lost 14 electrons by collision in the suns' million-degree coronal plasma gas.

BALL BROTHERS RESEARCH CORPORATION

BOULDER, COLORADO

NRL/ATM THERMAL DISTORTION PROGRAM USER'S MANUAL FOR S082A AND S082B INSTRUMENTS

620-250 25 July 1974

Contract No. N00014-67-C-0470
Contract Modification P00055

PREPARED

R. R. Anderson
Senior Member of Technical Staff

APPROVED

M. W. Frank
NRL/ATM Program Manager

FOREWORD

This manual provides the description and operational instructions for the thermal distortion program. This document consists of two (2) volumes and was prepared by Ball Brothers Research Corporation, Boulder, Colorado, for the Naval Research Laboratory, Washington, DC, under Contract No. N00014-67-C-0470. The authority for this document is BBRC Proposal C-474 which was added to the contract by Contract Modification P00055.

The following BBRC personnel have technical knowledge of the operational characteristics of the Thermal Distortion Computer Program:

R. R. (Andy) Anderson Armen Melikian Marsh Corgan, Jr.	Program Operation
Joe Butler	Program Software

TABLE OF CONTENTS

Title	Page
FOREWORD	ii
VOLUME I THERMAL DISTORTION ANALYSIS	
PREFACE	I-2
1.0 INTRODUCTION	I-4
2.0 DISCUSSION	I-4
APPENDIX A S082A Thermal Model	
PREFACE	A-2
1. Illustrations depicting the S082A Instrument and the Skylab/ATM canister node breakdown (Figs. A-1 thru A-8)	A-3
2. Structural Model Illustration (Fig. A-9)	A-11
3. Correlation: Thermal model node numbers and Skylab/ATM measurement numbers (Tables A-1 and A-2)	A-13
4. Measurement number and temperature probe location diagram (Fig. A-10)	A-12
5. Normal heat flux table and additional heat fluxes added as a function of aperture opening or other operation (Table A-3)	A-19
6. Listing of complete thermal model nominal data deck	A-20
APPENDIX B S082B Thermal Model	
PREFACE	B-2
1. Illustrations depicting the S082B Instrument and Skylab/ATM canister node breakdown (Figs. B-1 thru B-11)	B-3
2. S082B Structural Model Illustration (Fig. B-12)	B-14

TABLE OF CONTENTS (CONTINUED)

	Title	Page
3.	Correlation: Thermal model node numbers and Skylab ATM measurement numbers (Tables B-1 and B-2)	B-16
4.	Measurement number and temperature probe location diagram (Fig. B-13)	B-15
5.	Normal heat flux table and additional heat fluxes added as a function of aperture opening or other operation (Table B-3)	B-26
6.	Listing of complete thermal model nominal data deck	B-27

APPENDIX C
Thermal Distortion Program
Input Data Deck Description

PREFACE		C-2
1.	Input data deck Setup	C-4
2.	S082A Thermal Distortion Analysis Complete Input Data Listing	C-28
3.	S082B Thermal Distortion Analysis Complete Input Data Listing	C-53

VOLUME II
THERMAL DISTORTION PROGRAM
FINAL VERSION 2L

Computer Runs		1

LIST OF ILLUSTRATIONS

Figure No.	Title	Page
1	Thermal Distortion Program	I-5
2	NRL Thermal Distortion Analysis	I-6
3	Distortion Sign Convention NRL/ATM Experiment S082A	I-8
4	Maximum Allowable Thermal Distortions S082A Instrument	I-9
5	Distortion Sign Convention NRL/ATM Experiment S082B	I-10
6	Maximum Allowable Thermal Distortions S082B Instrument	I-11
A-1	Distortion Sign Convention, S082A Instrument	A-3
A-2	Skylab/ATM Canister Shroud Node Numbers, Quadrant IV	A-4
A-3	Skylab/ATM Cruciform Spar Insulation Nodes, Quadrant IV	A-5
A-4	Skylab ATM Cruciform (Spar), Quadrant IV Node Numbers	A-6
A-5	NRL-A Spectroheliograph Node Numbers	A-7
A-6	NRL-A Instrument Node Numbers, Cover and Bottom	A-8
A-7	NRL-A Spectroheliograph Node Numbers	A-9
A-8	NRL-A Spectroheliograph Camera Node Numbers	A-10
A-9	S082A Structural Model	A-11
A-10	Flight T/C Locations on NRL-A (S082A)	A-12
B-1	Distortion Sign Convention, S082B Instrument	B-3
B-2	ATM Canister Nodes, Quadrant III	B-4

LIST OF ILLUSTRATIONS (CONTINUED)

Figure No.	Title	Page
B-3	ATM Quadrant III Equipment	B-5
B-4	ATM Spar Insulation Nodes, Quadrant III	B-6
B-5	ATM Spar Nodes, Quadrant III	B-7
B-6	NRL-B Spectrograph and XUV Monitor Nodes	B-8
B-7	NRL-B Spectrograph and XUV Monitor, Interior Nodes	B-9
B-8	NRL-B Spectrograph and XUV Monitor Insulation Nodes	B-10
B-9	NRL-B Spectrograph Camera Nodes	B-11
B-10	ATM Hα Experiment Nodes	B-12
B-11	ATM Rate Gyro Nodes	B-13
B-12	NRL-B Spectrograph and XUV Monitor Structural Model	B-14
B-13	Flight T/C Locations on NRL-B (S082B)	B-15
C-1	Thermal Distortion Program - Deck Setup	C-3

LIST OF TABLES

Table No.	Title	Page
1	S082A Spectroheliograph Optical Image Tolerances for Thermal Distortion	I-12
2	S082B Spectrograph and XUV Monitor Optical Image Tolerances for Thermal Distortion	I-13
3	NRL-B Optical Image Tolerances for Thermal Distortion	I-14
A-1	Correlation: Thermal Model Node Numbers and Skylab/STM Measurement Numbers	A-13

LIST OF TABLES (CONTINUED)

Table No.	Title	Page
A-2	Data Required for Thermal Distortion Analysis	A-17
A-3	S082A Heat Flux Table	A-19
B-1	Correlation: Thermal Model Node Numbers and Skylab/ATM Measurement Numbers	B-16
B-2	Data Required for Thermal Distortion Analysis, NRL-B	B-23
B-3	S082B Heat Flux Table	B-26
C-1	Available Nodes for Telemetry Probe Data	C-12

BALL BROTHERS RESEARCH CORPORATION

VOLUME I

THERMAL DISTORTION ANALYSIS

NRL/ATM THERMAL DISTORTION PROGRAM USER'S MANUAL FOR S082A AND S082B INSTRUMENTS

620-250 25 July 1974

Contract No. N00014-67-C-0470
Contract Modification P00055

PREFACE

This report provides a description of the thermal distortion analysis program used to analyze the NRL S082A and S082B instruments during the Skylab ATM missions.

The purpose of this report is to document the thermal distortion program used to compute the NRL S082A and S082B instrument thermal distortion during the Skylab/ATM missions, and to provide a basic manual for its use.

The program input data requirements are described in detail so that stacking of the computer input data deck could be done by anyone familiar with computer techniques. The tabulated and plotted output data is described to provide ease in interpretation of the computer output data. The thermal distortion parameters are listed in tables and sketches and described in terms of the optical image requirements.

A description of the thermal structural model is provided and includes sketches of the thermal node breakdown and a complete listing of the thermal-analytical model. A drawing of the structural model is included to complete the description.

Volume 2 of this report consists of:

1. A complete program listing, Version 2L, which was the program version in use at the end of the Skylab 3 (SL-3) manned mission.

   [A computer tape copy and a punched card (Fortran deck) copy of the program as listed in Version 2L will be forwarded to NRL with this report.]

2. A listing of the input data deck for NRL S082A and S082B.

   (A punched card copy of the listing will be forwarded to NRL with this report.)

3. Item 2 also includes a listing of the S082A and S082B thermal analytical models. A computer tape copy of these models, which can be used in lieu of the card deck, will be forwarded to NRL with this report.

1.0 INTRODUCTION

A description of the development and use of the thermal distortion program used to analyze the thermal performance of the Naval Research Laboratory S082A and S082B Instruments during the Skylab missions is given in BBRC Document No. 620-238 released 1 May 1974. In addition all thermal distortion data generated during the Skylab missions is included in Volumes II through V of that report.

The program was developed for the purpose of providing near real time thermal distortion data from which scientific data acquisition decisions could be made during the Skylab missions. In addition, the thermal distortion data generated during the missions would be useful for post-mission scientific data analysis.

The intent of this report is to document the thermal distortion program and provide a manual for its use in the event that additional thermal distortion data is desired.

2.0 DISCUSSION

Figures 1 and 2 provide a block diagram and flow chart of the thermal distortion program. The basic building blocks of the program are the thermal analytical models used in the thermal design analysis and the structural models used for stress and dynamics analysis.

The thermal and structural models for the S082A and S082B instruments are described in Appendices A and B respectively. The thermal models consist of 215 nodes for S082A and 344 nodes for S082B.

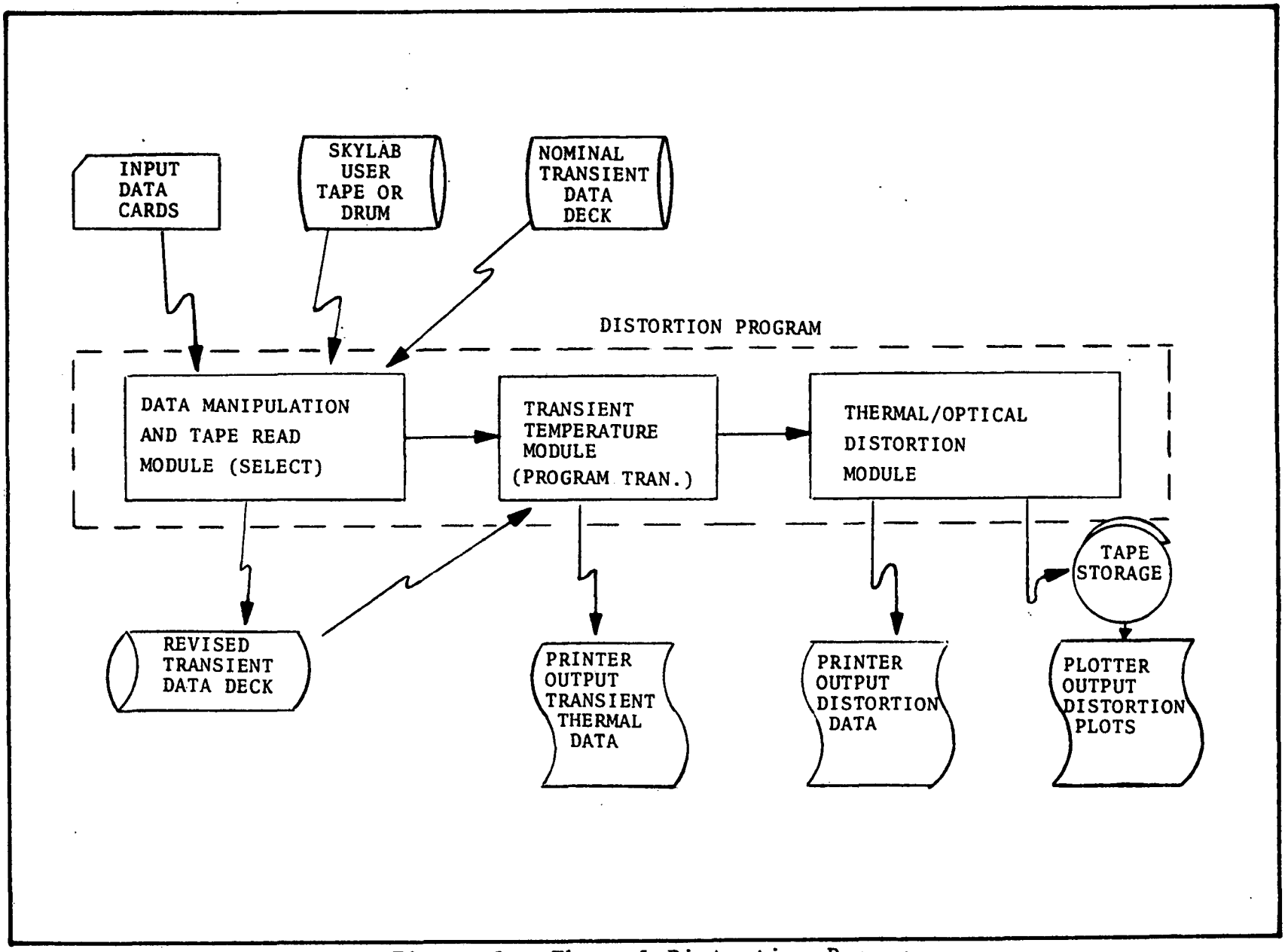

Figure 1. Thermal Distortion Program

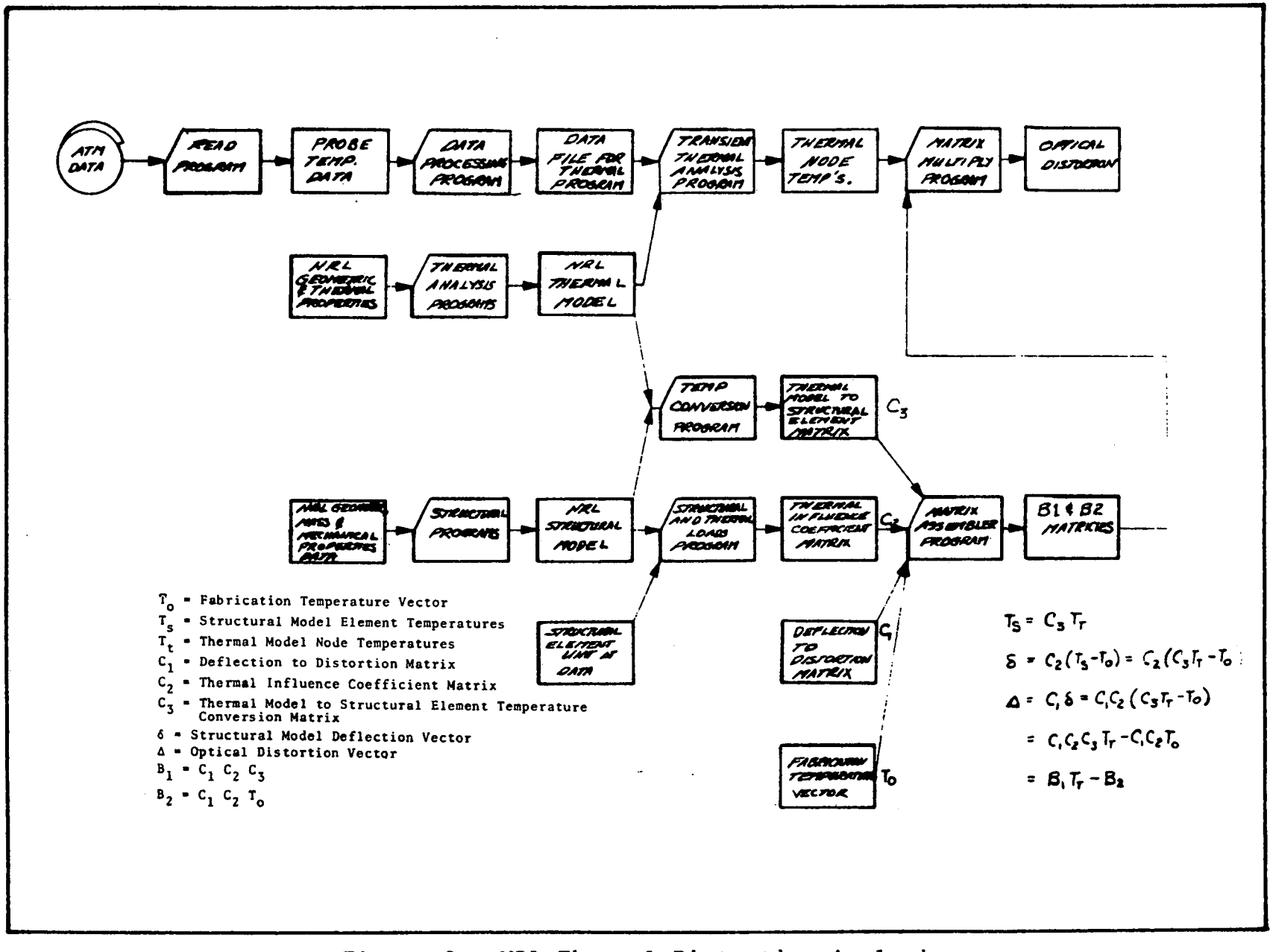

Figure 2. NRL Thermal Distortion Analysis

Forty-three probe temperatures for S082A (Appendix A, Table A-1) and 119 probe temperatures for S082B (Appendix B, Table B-1) including quadrant environmental temperatures are read from Skylab telemetry data tape at 0.025 hour (1.5 minute) intervals (adjustable) during the orbit being analyzed. These data are input to the transient thermal analysis program as time dependent specified temperatures. The output of this transient thermal analysis program is the thermal model node temperature/time array, T_t, of Figure 2. The temperature/time array, T_t, for each output time interval, normally 0.05 hour (3 minutes), is input to the optical distortion matrix multiplication program (Figure 2), which generates the instrument optical distortion parameters at each time interval. The optical thermal distortion parameters are output in both tabulated and plotted format. The thermal distortion sign convention and maximum allowable thermal distortions are shown in Figures 3 and 4 and Table 1 for S082A and in Figures 5 and 6 and Tables 2 and 3 for S082B.

Appendix C is a step-by-step procedure for preparing the input data deck to run the thermal distortion program.

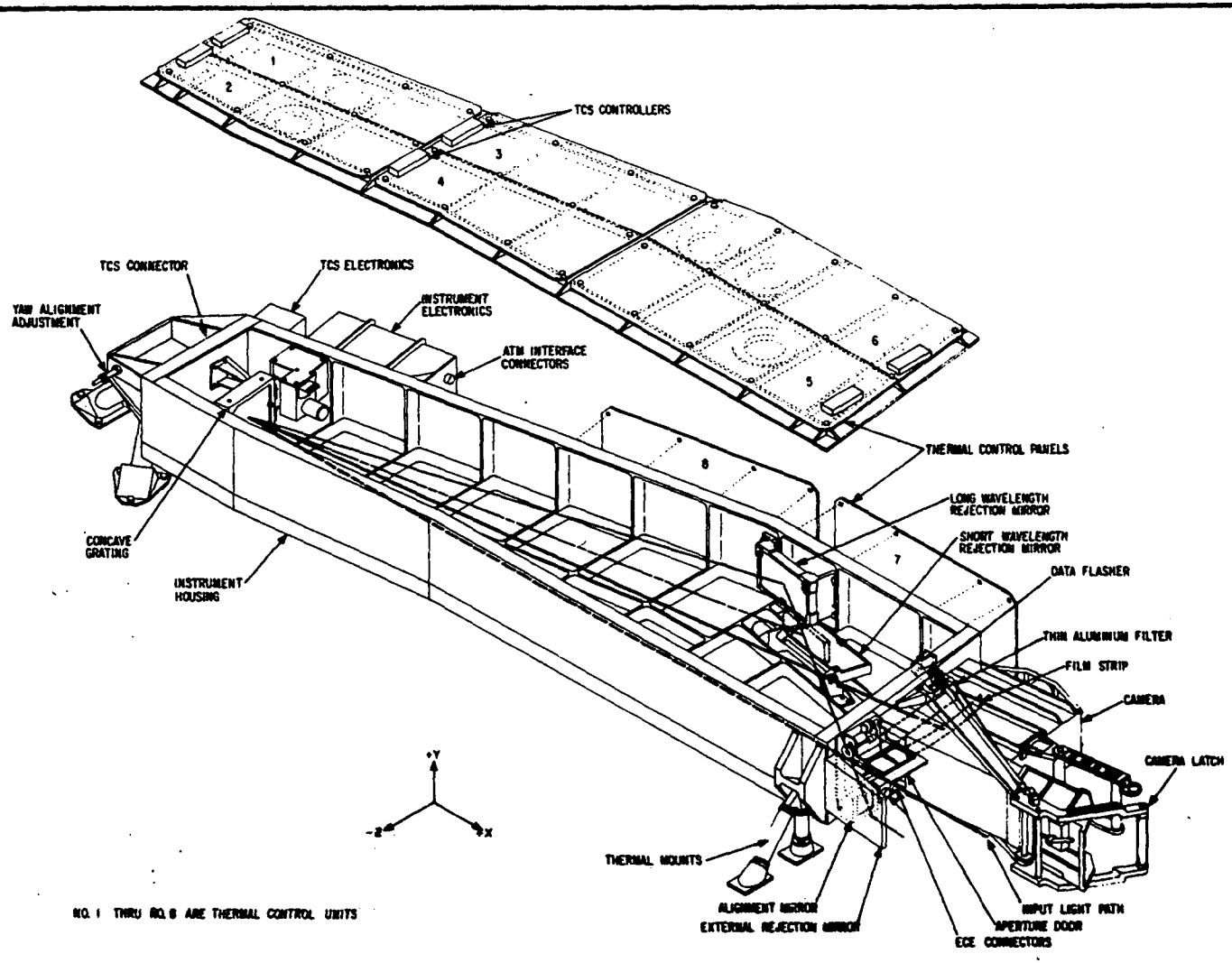

Focal Distance - Positive No. indicates distance image is in front of film.
Negative No. indicates distance image is behind film.

Vertical Movement - Positive No. indicates image movement in the +Y direction relative to the film plane.

Horizontal Movement - Positive No. indicates image movement in the +Z direction relative to the film plane.

Figure 3. Distortion Sign Convention
NRL/ATM Experiment S082A

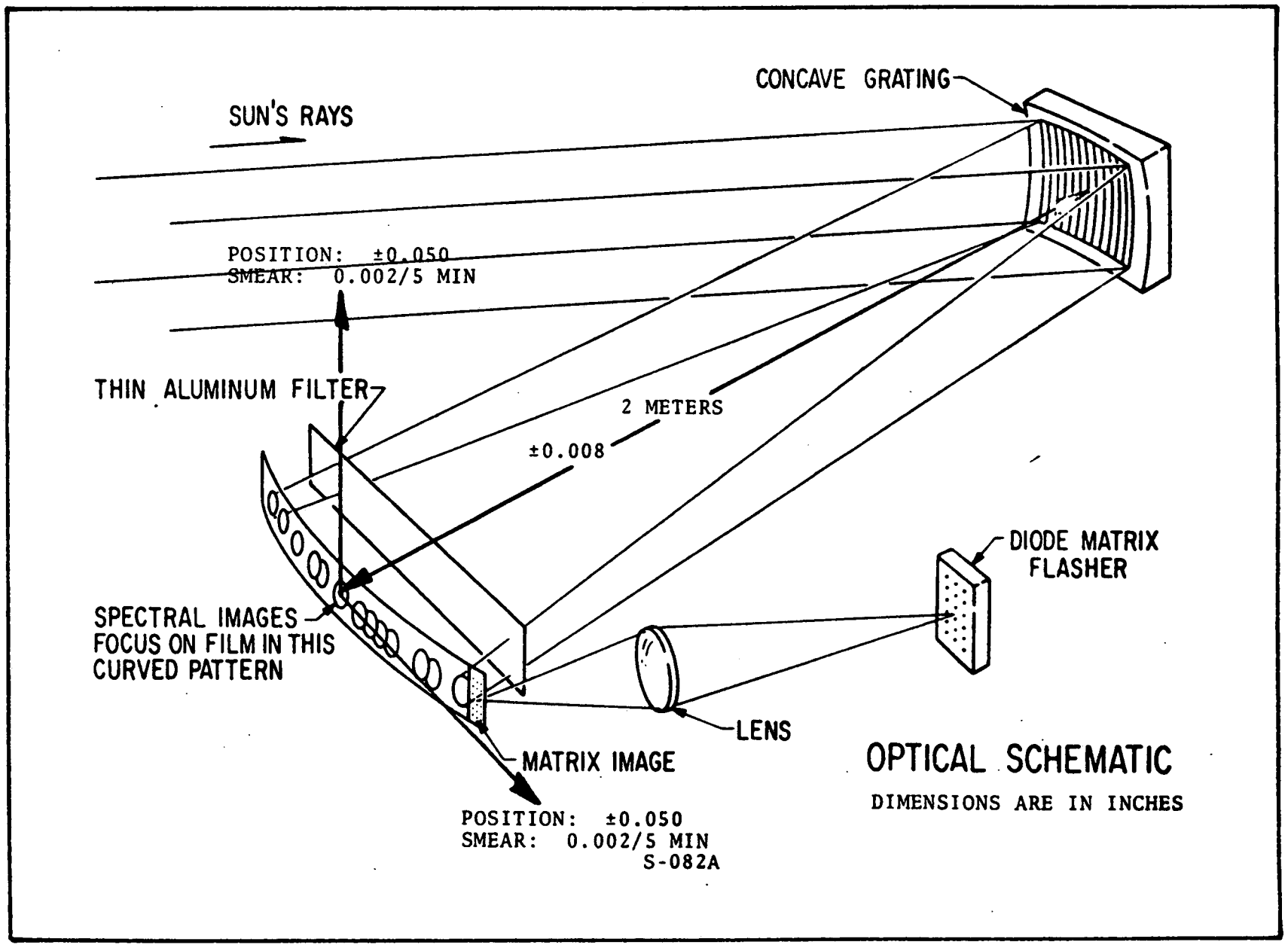

Figure 4. Maximum Allowable Thermal Distortions S082A Instrument

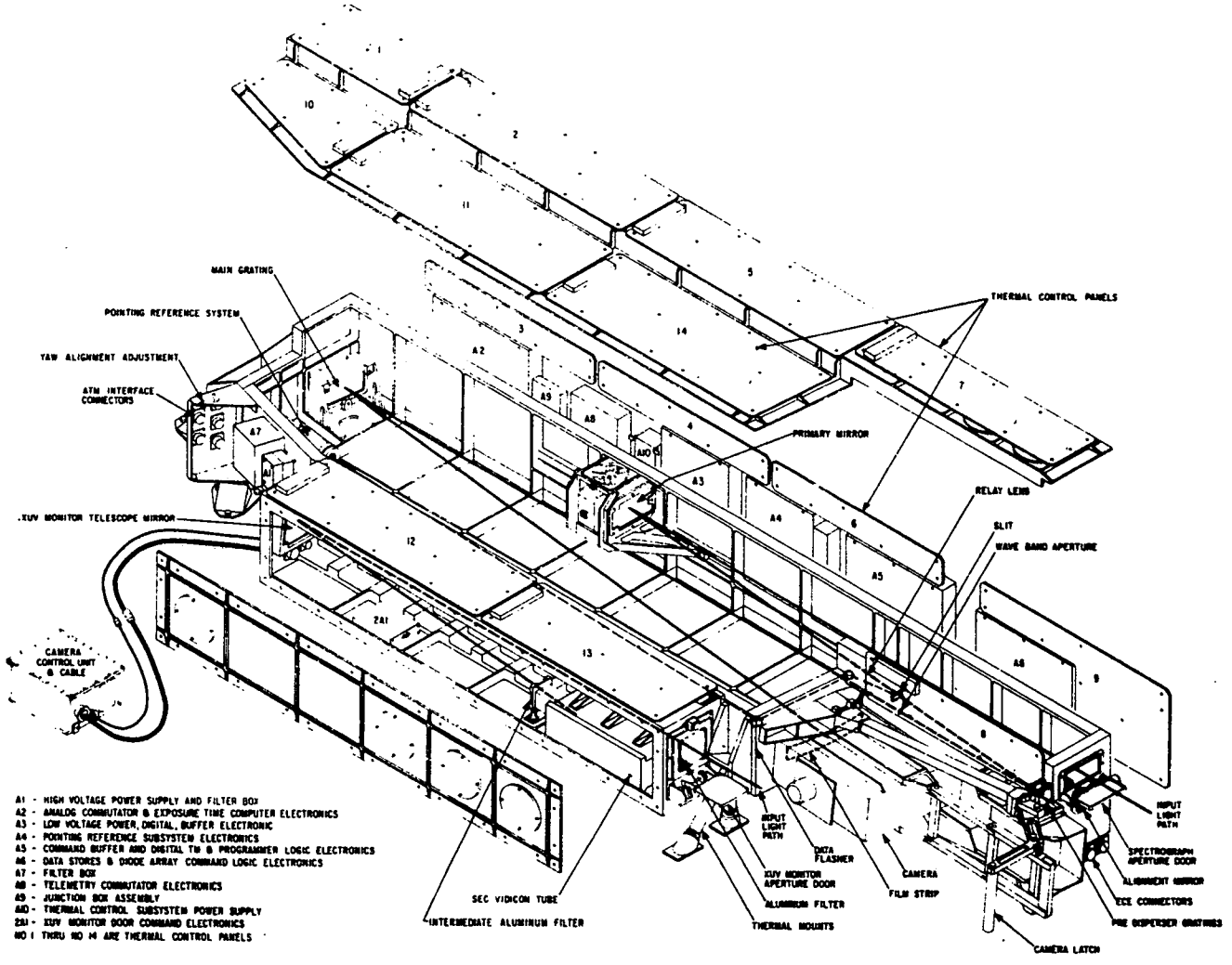

Focal Distance - Positive No. indicates distance image is in front of slit or film.
Negative No. indicates distance image is behind slit or film.

Horizontal Movement - Positive No. indicates image movement in the +Y direction relative to the slit or film plane.

Vertical Movement - Positive No. indicates image movement in the +Z direction relative to the slit or film plane.

Figure 5. Distortion Sign Convention
NRL/ATM Experiment S082B

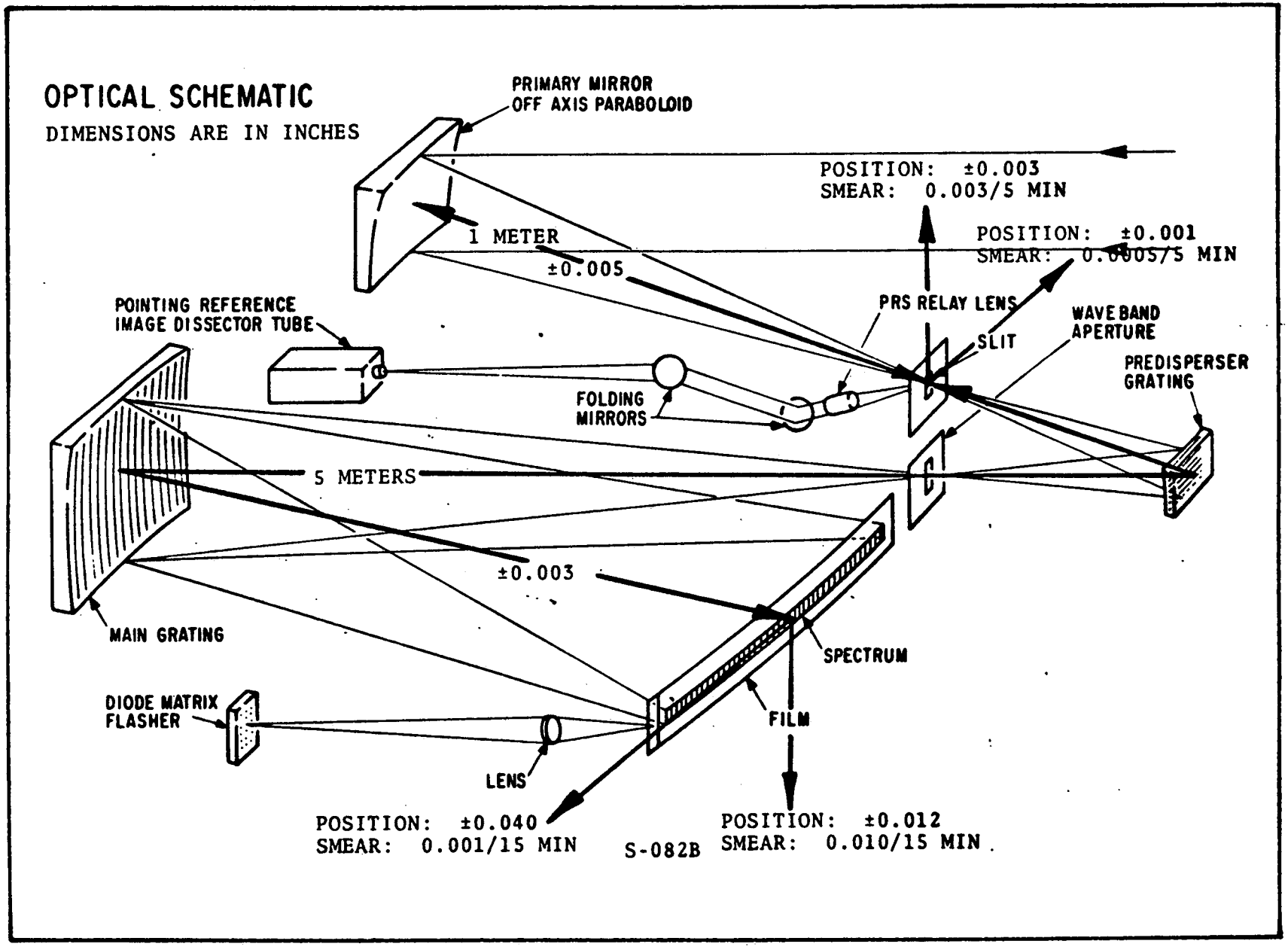

Figure 6. Maximum Allowable Thermal Distortions
S082B Instrument

Table 1

S082A SPECTROHELIOGRAPH

OPTICAL IMAGE TOLERANCES FOR THERMAL DISTORTION

Solar Image on Film

Focus		$(X-X_o)$ Image on Film		$T-T_o$*	Basis
Tolerance		±0.20 mm	±0.008 inch	±8.0°F	D&PS
Accuracy		±0.05	±0.002	±2.0°F	
Horiz. Position		$(Z-Z_o)$ Image on Film		ΔT Hor.	
Tolerance	2 arc-minutes Solar Image	±1.25 mm	±0.050 inch	±13.0°F	Estimate
Accuracy					
Vert. Position		$(Y-Y_o)$ Image on Film		ΔT Vert.	
Tolerance	2 arc-minutes Solar Image	±1.25 mm	±0.050 inch	± 5.5°F	Estimate
Accuracy					
Horiz. Smear		$\Delta(Z-Z_o)$ in 5 Minutes		ΔΔT/5 Min.	
Tolerance	5 arc-seconds/5 Minutes	0.05 mm	0.002 inch	0.5°F	D&PS
Accuracy		±0.012	±0.0005	± 0.12°F	
Vert. Smear		$\Delta(Y-Y_o)$ in 5 Minutes		ΔΔT/5 Min.	
Tolerance	5 arc-seconds/5 Minutes	0.05 mm	0.002 inch	0.22°F	D&PS
Accuracy		±0.012	±0.0005	± 0.05°F	

*T_o = Calibration Temperature = °F

Table 2

S082B SPECTROGRAPH AND XUV MONITOR

OPTICAL IMAGE TOLERANCES FOR THERMAL DISTORTION

Sun Image on Slit Plate

Focus		$(X-X_o)$ Sun Image			$T-T_o$*	Basis
Tolerance	2.5 arc-sec Image Blur	±0.126 mm	±0.005	inch	±9.6°F	D&PS
Accuracy		±0.025	±0.001		±2.0°F	
Horiz. Position		$(Y-Y_o)$ Sun Image			ΔT Hor.	
Tolerance	±5 arc-sec on Solar Image	±0.025 mm	±0.001	inch	±2.5°F	Co-Align
Accuracy		±0.010	±0.0004		± 1°F	HCO
Vert. Position		$(Z-Z_o)$ Sun Image			ΔT Vert.	
Tolerance	±15 arc-sec on Solar Image	±0.075 mm	±0.003	inch	±2.5°F	Co-Align
Accuracy		±0.030	±0.0012		± 1°F	HCO
Horiz. Smear		$\Delta(Y-Y_o)$ in 5 Minutes			ΔΔT/5 Min.	
Tolerance	2.5 arc-sec/5 Minutes	0.0125 mm	0.0005	inch	±1.25°F	D&PS
Accuracy		±0.005	±0.0002		±0.5°F	
Vert. Smear		$\Delta(Z-Z_o)$ in 5 Minutes			ΔΔT/5 Min.	
Tolerance	15 arc-sec/5 Minutes	0.075 mm	0.003	inch	2.5°F	Est.
Accuracy		±0.025	±0.001		±0.8°F	

* T_o = Calibration temperature = 69.8°F

Table 3

NRL-B OPTICAL IMAGE TOLERANCES FOR THERMAL DISTORTION

Slit Image on Film

Focus		$(X-X_o)$ Image on Film		$T-T_o$*	Basis
Tolerance	6 μ Image Blur	±0.076 mm	±0.003 inch	±1.2°F	D&PS
Accuracy		±0.025	±0.001	±0.4°F	
Horiz. Position		$(Y-Y_o)$ Image on Film		ΔT Hor.	
Tolerance		±1.0 mm	±0.04 inch	± 13°F	Estimate
Accuracy		±0.25	±0.01	± 3°F	(Conservative)
Vert. Position		$(Z-Z_o)$ Image on Film		ΔT Vert.	
Tolerance		±0.3 mm	±0.012 inch	±1.3°F	Estimate
Accuracy		±0.1	±0.004	±0.4°F	
Horiz. Smear		$\Delta(Y-Y_o)$ Image on Film/15 Min		ΔΔT/15 Min.	
Tolerance	25 μ/15 Minutes	0.025 mm	0.001 inch	0.33°F	D&PS
Accuracy		±0.005	±0.0002	±0.07°F	
Vert. Smear		$\Delta(Z-Z_o)$ Image on Film/15 Min		ΔΔT/15 Min.	
Tolerance	250 μ/15 Minutes	0.25 mm	0.010 inch	1.1°F	D&PS
Accuracy		±0.05	±0.002	±0.2°F	

* T = Calibration temperature = 69.8°F

APPENDIX A
S082A Thermal Model

PREFACE

The purpose of this appendix is to document the thermal analytical model used in the S082A Thermal Distortion Analyses.

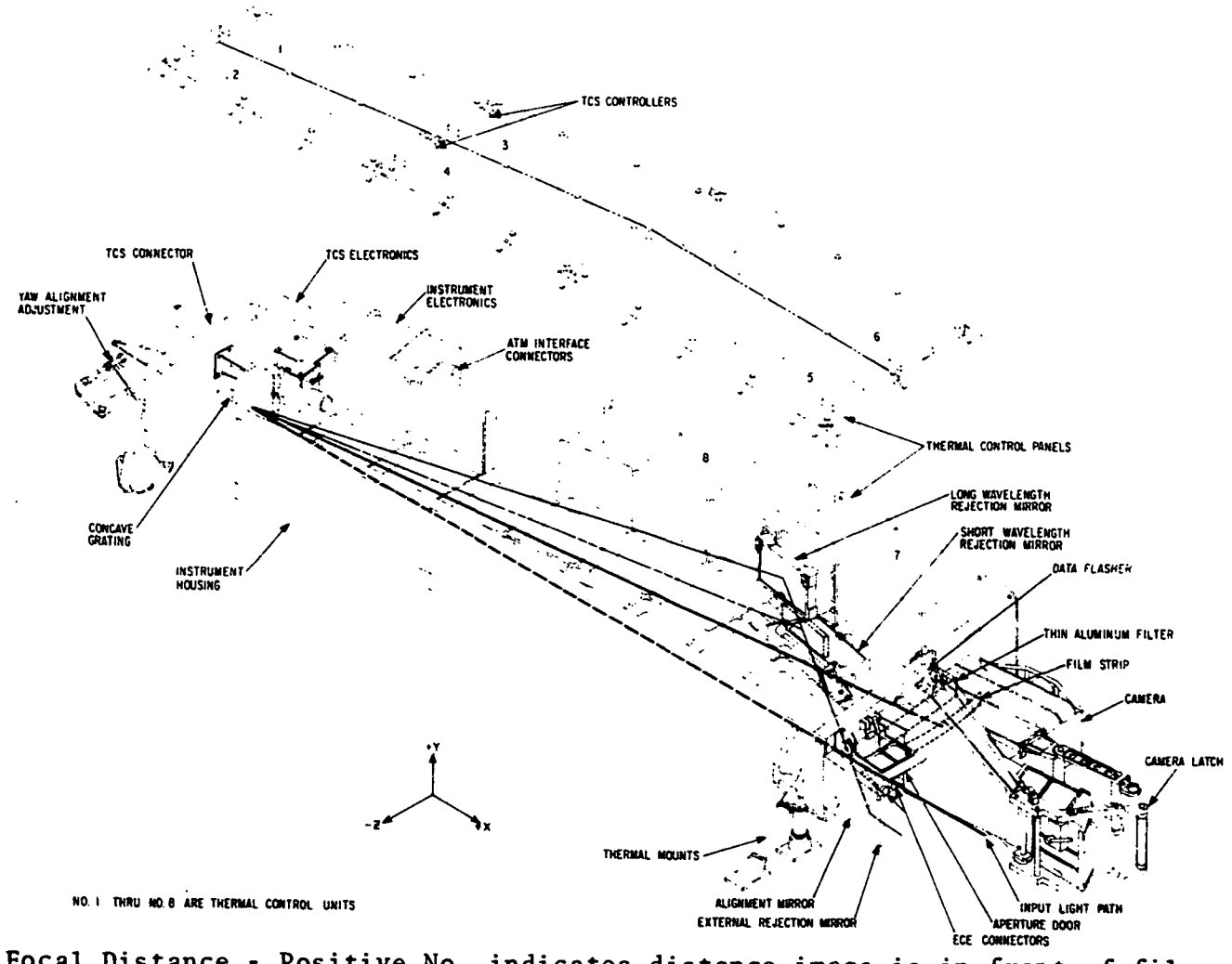

Focal Distance - Positive No. indicates distance image is in front of film.
Negative No. indicates distance image is behind film.

Vertical Movement - Positive No. indicates image movement in the +Y direction relative to the film plane.

Horizontal Movement - Positive No. indicates image movement in the +Z direction relative to the film plane.

Figure A-1. Distortion Sign Convention
S082A Instrument

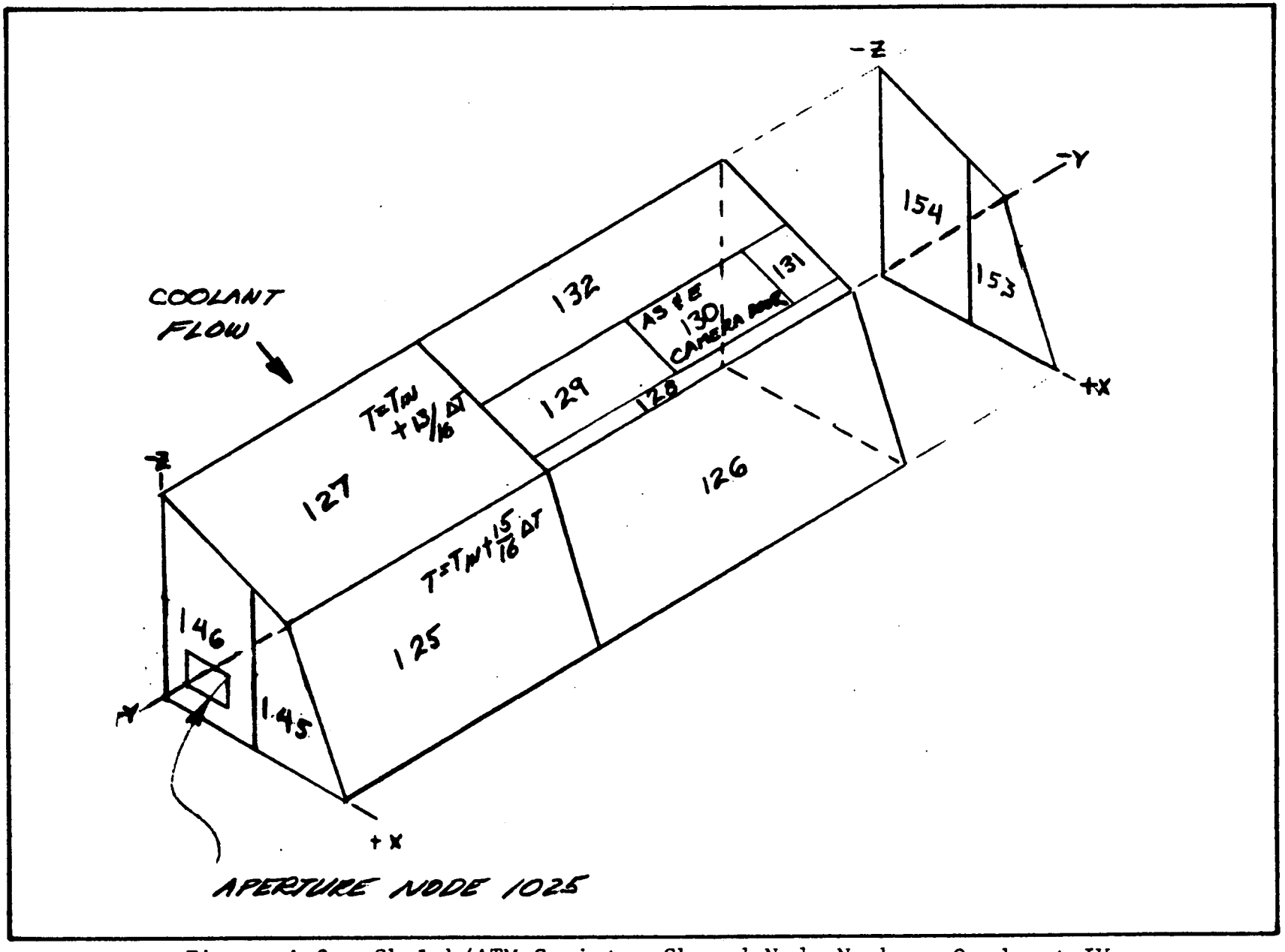

Figure A-2. Skylab/ATM Canister Shroud Node Numbers, Quadrant IV

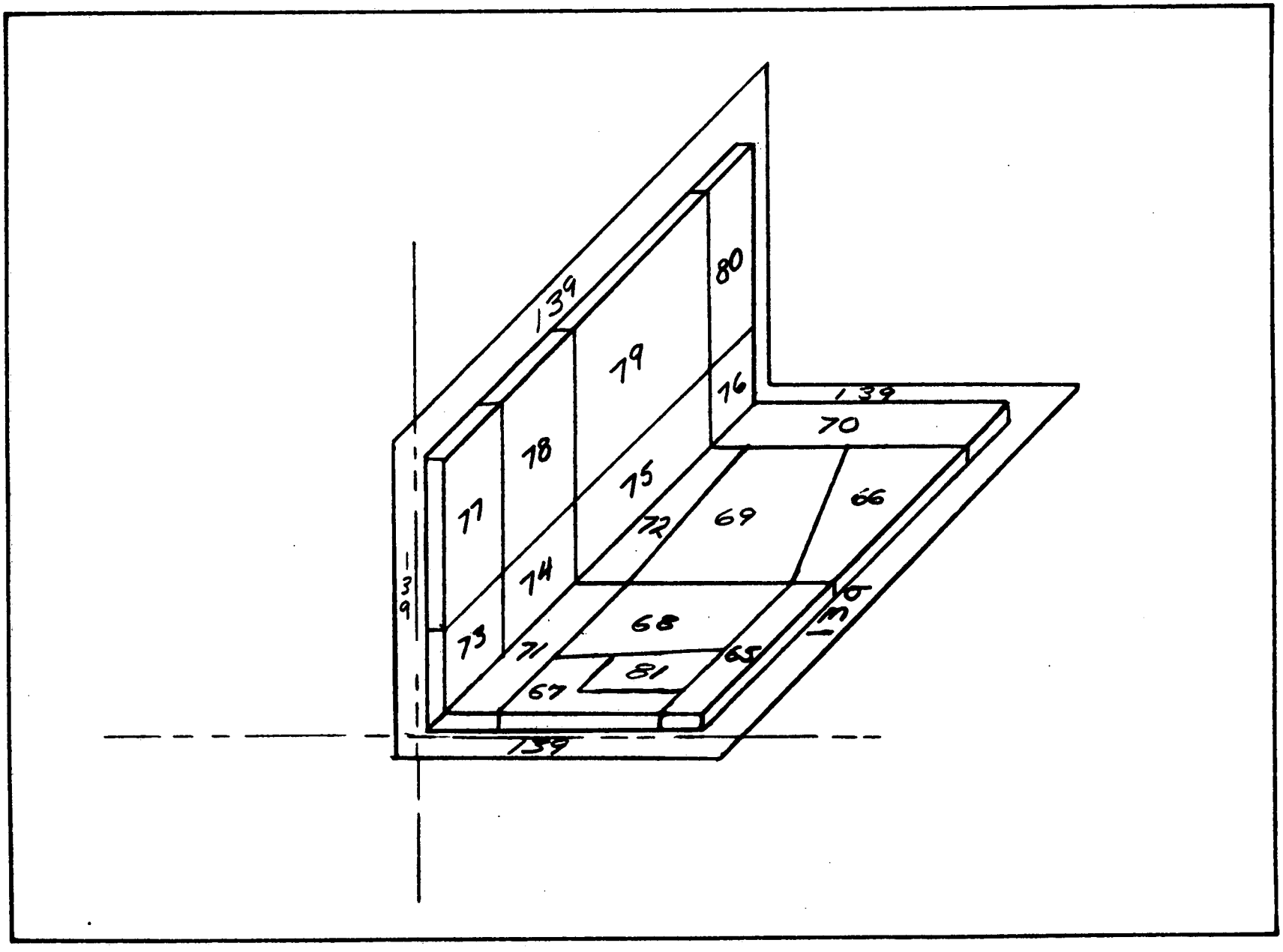

Figure A-3. Skylab/ATM Cruciform Spar Insulation Nodes, Quadrant IV

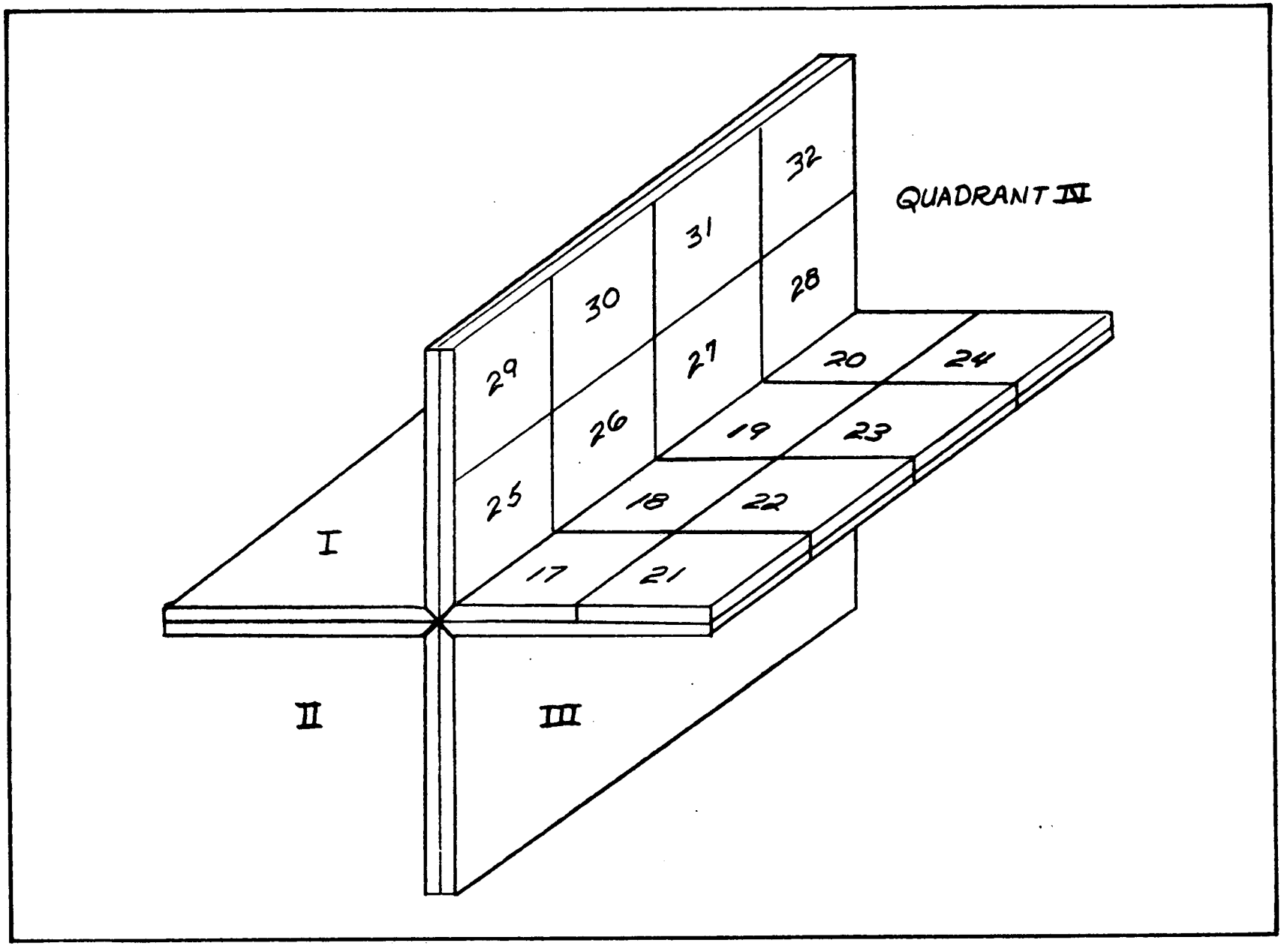

Figure A-4. Skylab ATM Cruciform (Spar), Quadrant IV Node Numbers

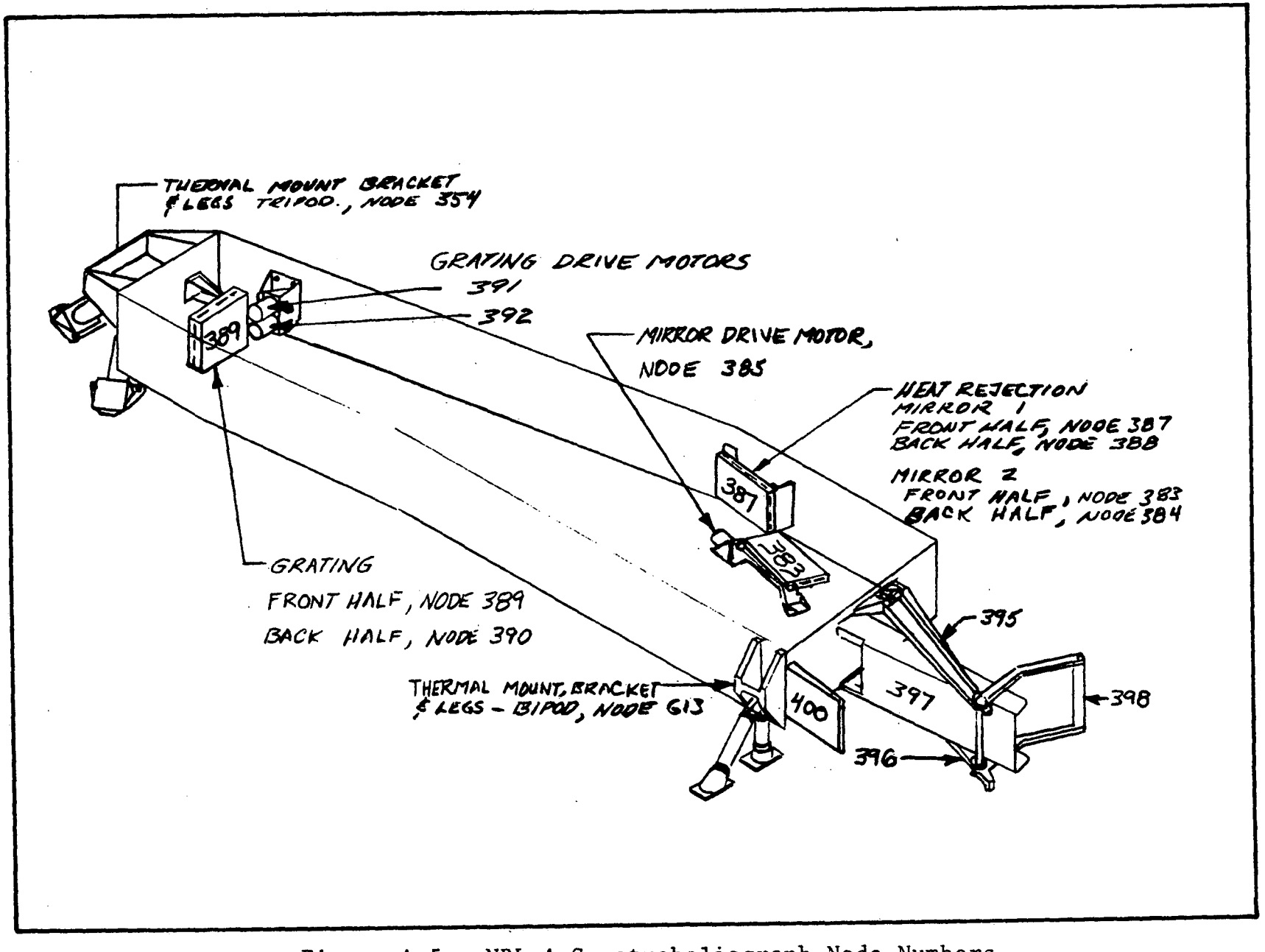

Figure A-5. NRL-A Spectroheliograph Node Numbers

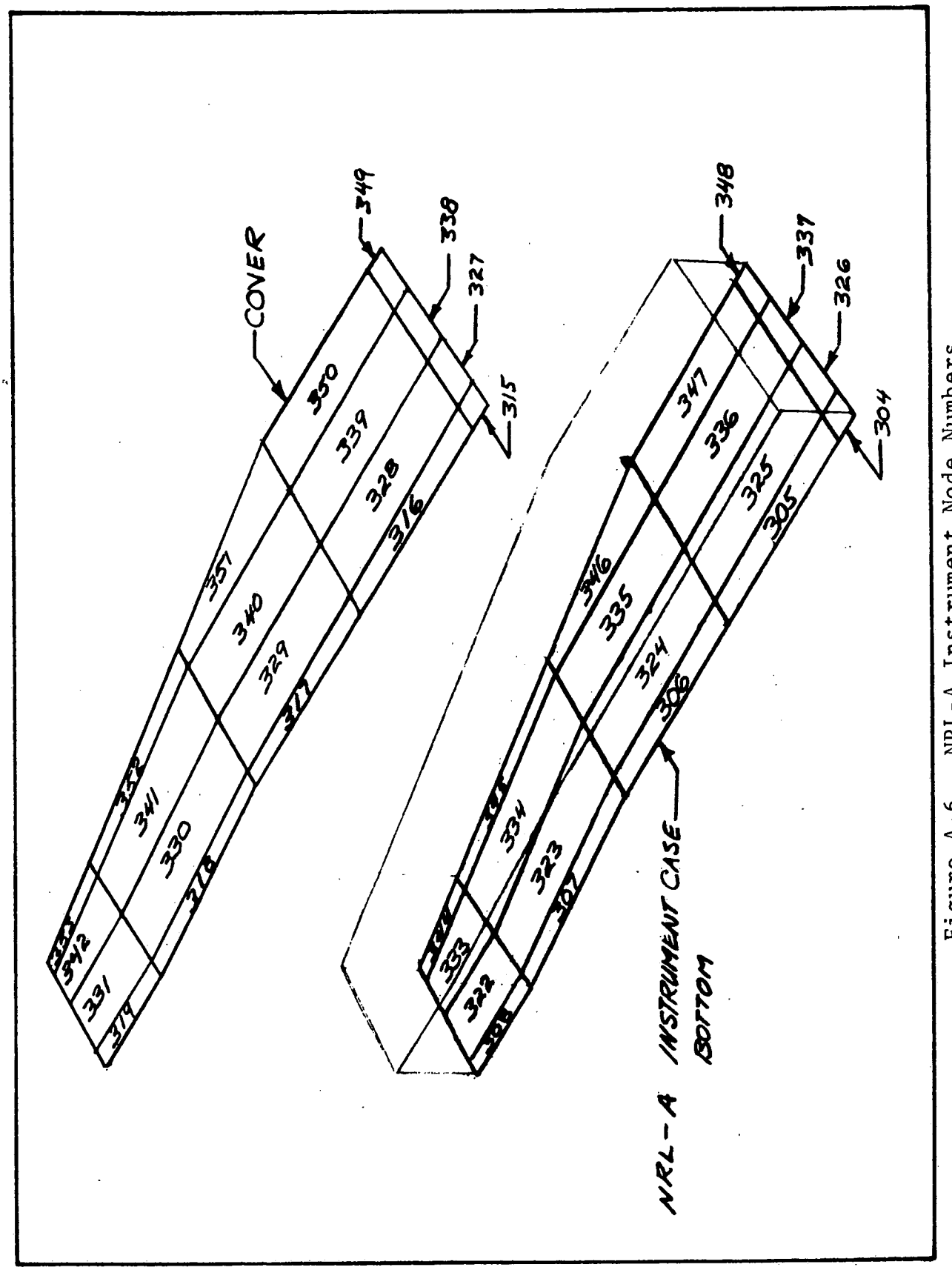

Figure A-6. NRL-A Instrument Node Numbers, Cover and Bottom

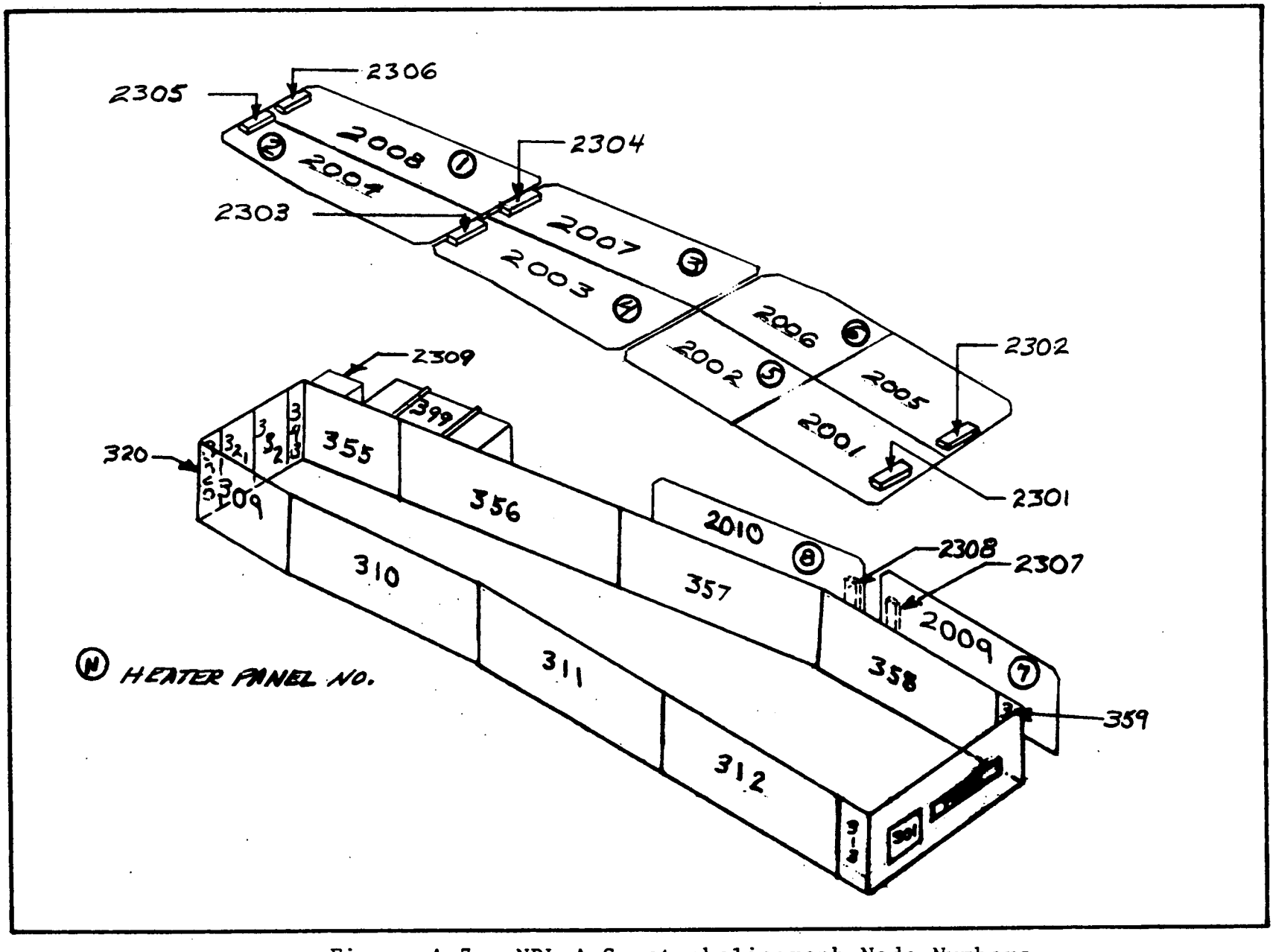

Figure A-7. NRL-A Spectroheliograph Node Numbers

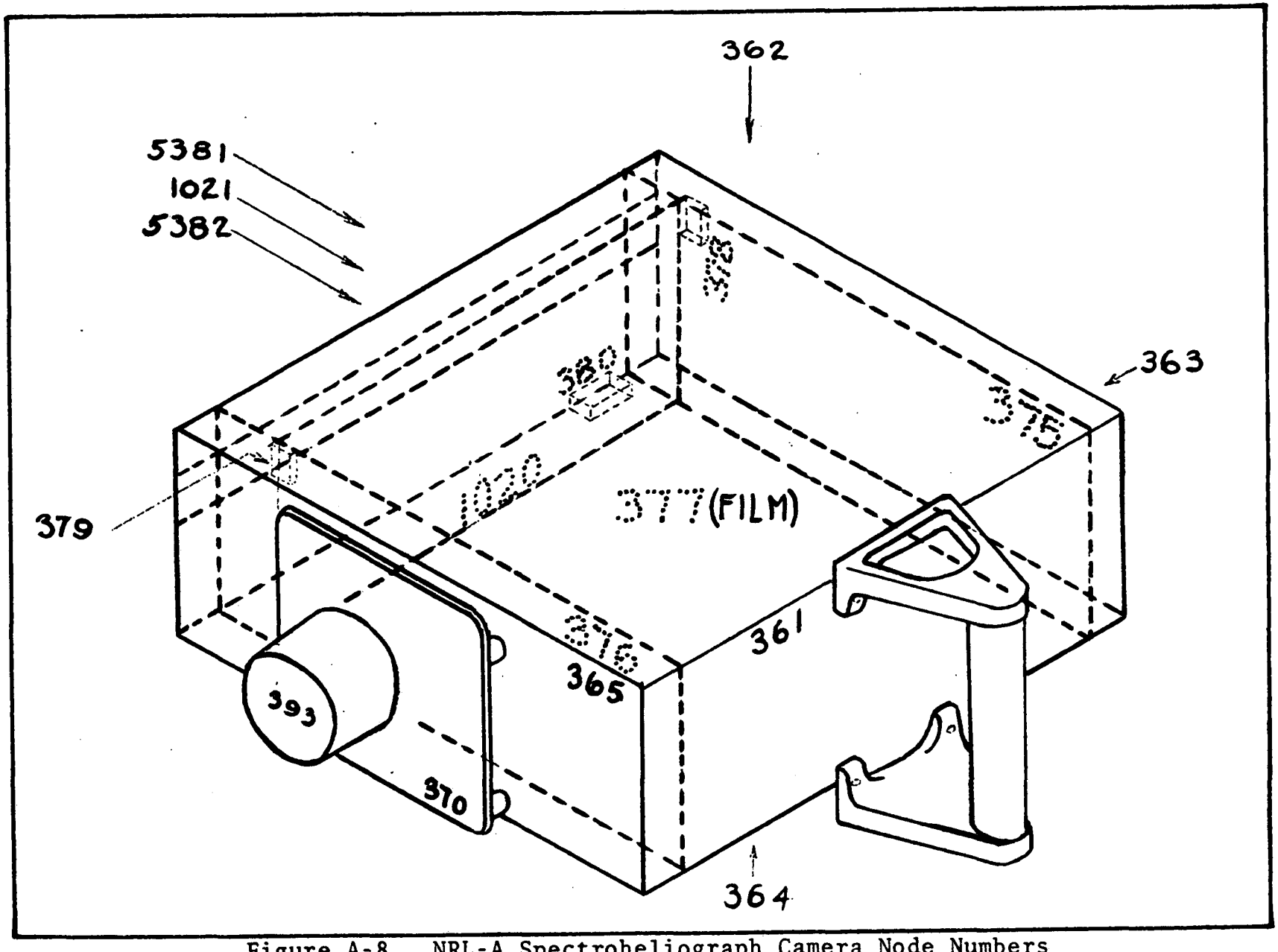

Figure A-8. NRL-A Spectroheliograph Camera Node Numbers

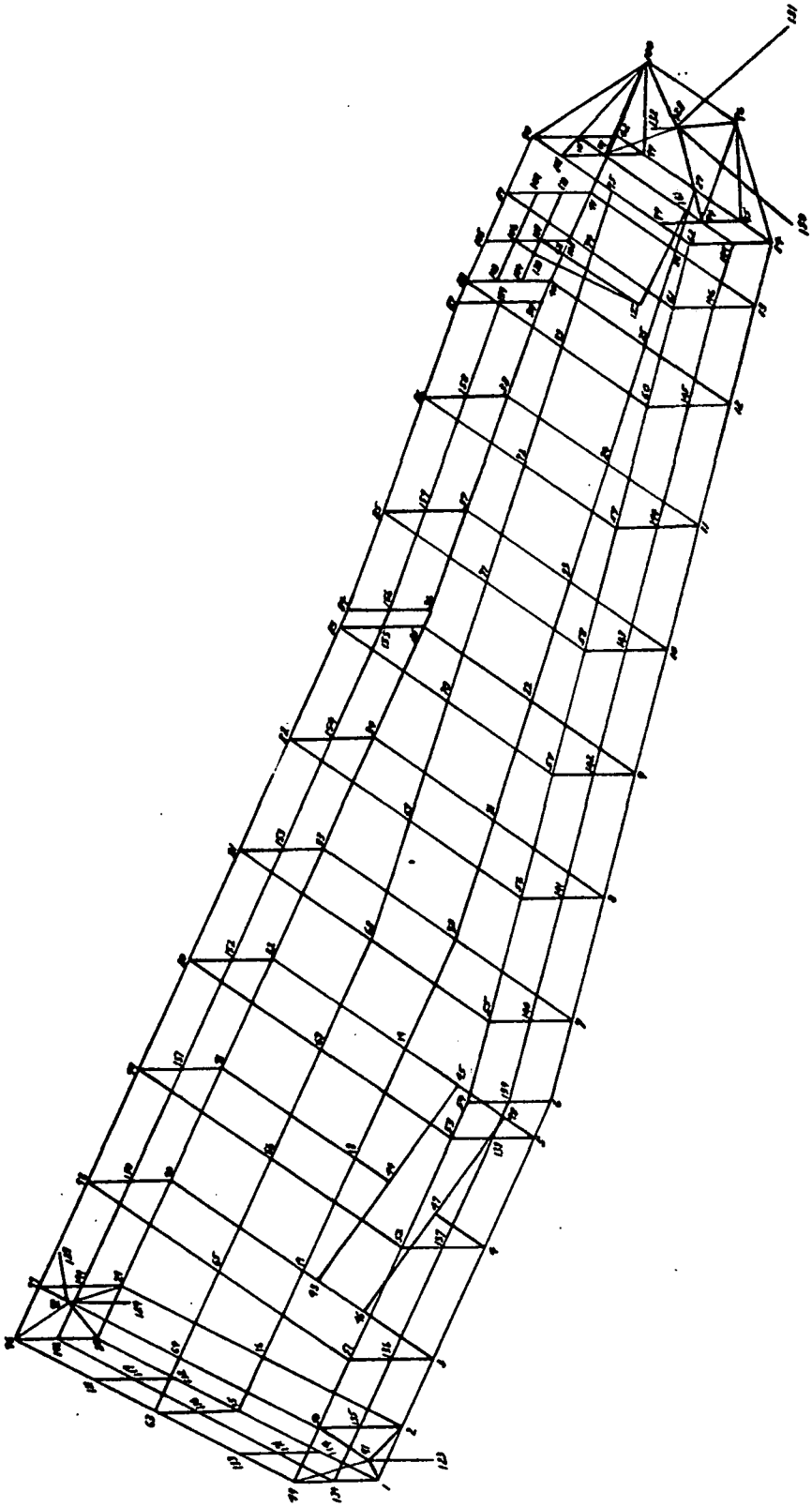

Figure A-9. S082A Structural Model

Measurement Number	Measurement Description
C0090	NRL-A Case Rear Center, Base
C0091	NRL-A Case Center Base
C0092	NRL-A Front Center Base
C0095	NRL-A Case Rear Center Right Center
C0096	NRL-A Case Center Right Side
C0197	NRL-A Case Front Center Left Side
C0200	NRL-A Grating, Lower Edge
C0201	NRL-A Case Front Center Lid to Base Diff
C0202	NRL-A Case Center Lid to Base Diff
C0203	NRL-A Case Rear Center Lid to Base Diff
C0204	NRL-A Case Front Center Side to Side Diff
C0205	NRL-A Case Center Side to Side Diff
C0206	NRL-A Case Rear Center Diff
C0257	NRL-A Instrument Electronics, Internal

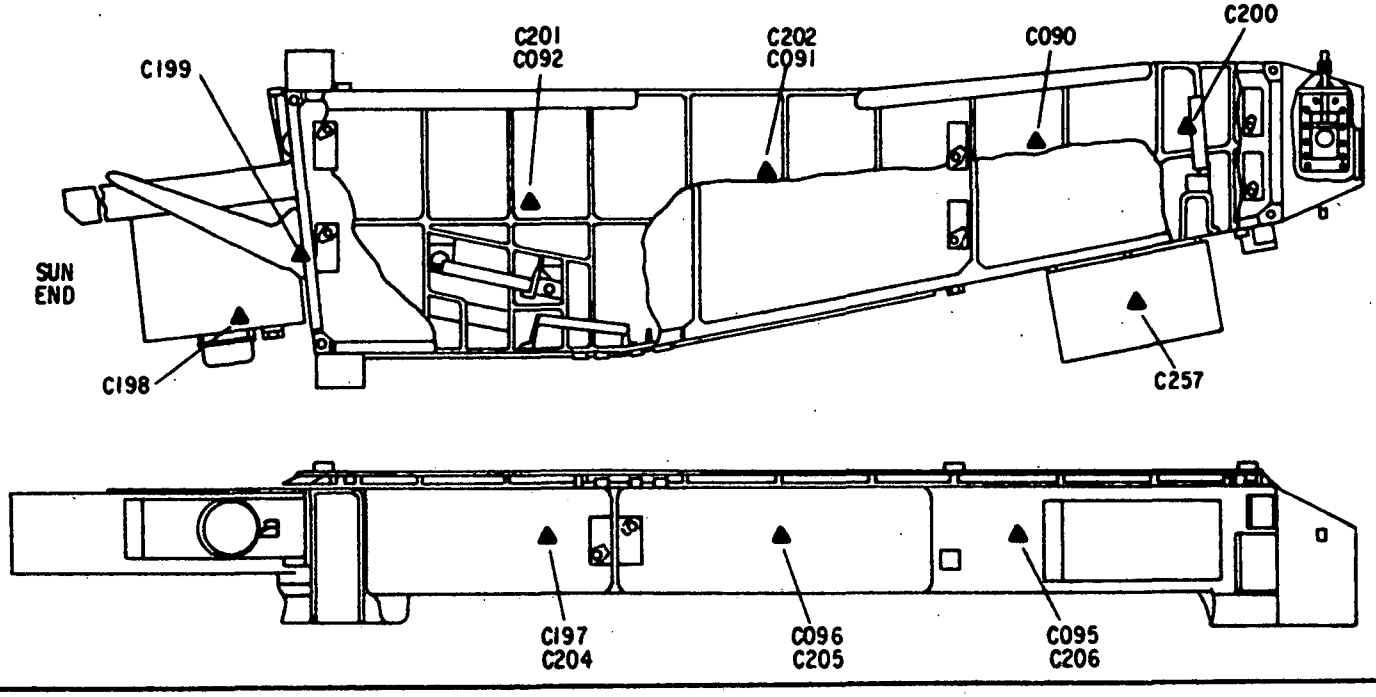

Figure A-10. Flight T/C Locations on NRL-A (S082A)

Table A-1

CORRELATION:
THERMAL MODEL NODE NUMBERS
AND
SKYLAB/ATM MEASUREMENT NUMBERS

Table A-1

Node Number	Equation in Terms of Measurement Number	Description
145	C0318	ATM Canister Sun End
146	C0318	ATM Canister Sun End
153	C0314	ATM Canister MDA End
154	C0314	ATM Canister MDA End
20	C0319	ATM Spar
24	C0319	
28	C0319	
32	C0319	
18	C0320	
19	C0320	
22		
23		
26		
27		
30		
31	C0320	
17	C0321	
21		
25		
29	C0321	ATM Spar

Table A-1

Node Number	Equation in Terms of Measurement Number	Description
9005	C0459	Fine Sun Sensor
9001	C0165	AS & E
9002	[C0166 + C0167]/2	AS & E
125	[(C0286) + 15/16(C0288)]	ATM Canister
127	[(C0286) + 13/16(C0288)]	
126	[(C0286) + 15/16(C0287)]	
128	[(C0286) + 13/16(C0287)]	
129		
131		
132	[(C0286) + 13/16(C0287)]	ATM Canister
130	C0298	AS & E Door on ATM Canister
310	C0095	S-082A Instrument Case
311	C0096 - C0205	
312	C0197	
323	C0090	
324	C0091	
325	C0092	
328	C0092 + C0201	
329	C0091 + C0202	S-082A Instrument Case

Table A-1

Node Number	Equation in Terms of Measurement Number	Description
330	C0090 + C0203	S-082A Instrument Case
356	C0095 - C0206	↕
357	C0096	
358	C0197 + C0204	S-082A Instrument Case

Table A-2 Sheet 1 of 2

DATA REQUIRED FOR THERMAL DISTORTION ANALYSIS

NODE NO.	MEASUREMENT NO.	& DESCRIPTION
	NO.	DESCRIPTION
323	C0090	TEMP., REAR CTR BASE
324	C0091	" CENTER BASE
325	C0092	" FRONT CTR BASE
310	C0095	" REAR CTR RIGHT SIDE
357	C0096	" CENTER LEFT SIDE
312	C0197	" FRT CTR RIGHT SIDE
	C0200	" GRATING, LOWER EDGE
	C0201	DIFF. TEMP., FRT CTR LID TO BASE
	C0202	" " CENTER LID TO BASE
	C0203	" " REAR CENTER LID TO BASE
	C0204	" " FRT CTR SIDE TO SIDE
	C0205	" " CTR SIDE TO SIDE
	C0206	" " REAR CTR SIDE TO SIDE
	K0099	TIME SEQUENCE ON
	K0098	SPECTRAL SEQUENCE ON
	K0208	FLARE MODE ON
	K0214	APERTURE OPEN
	K0212	LONG λ OBSERVATION
	K0213	SHORT λ OBSERVATION

Table A-2 Sheet 2 of 2

NODE NO.	MEASUREMENT NO. & DESCRIPTION NO.	DESCRIPTION
CANISTER		
125 to 132	C0286	TEMP. PRI M/W INLET TO CAN
" "	C0287	TEMP. DIFF M/W INLET TO OUTLET, CAN
" "	C0288	TEMP. DIFF M/W INLET TO OUTLET, CAN
153/154	C0314	TEMP. QIV MDA END CANISTER
145/146	C0318	TEMP. QIV SUN END CANISTER
130	C0298	TEMP. AS&E CAMERA DOOR
SPAR		
20, 24, 28, 32	C0319	TEMP. SPAR MDA END
18, 19, 22, 23, 26, 27, 30, 31	C0320	TEMP. SPAR MIDPOINT
27, 21, 25, 29	C0321	TEMP. SPAR SUN END
FSS		
9005	C0459	TEMP. OPTO-MECH ASSY FSS
AS&E		
9001 to 9002	C0165	TEMP. TLSC ASSY, FWD HOUSING
" "	C0166	TEMP. TLSC ASSY, REAR HOUSING
" "	C0167	TEMP. TLSC ASSY, REAR ASSY NO. 2

NRL-A

Table A-3

S082A HEAT FLUX TABLE

		Basic Flux Table (Btu/Hr)		Add On Flux (Btu/Hr)	
Ident.	Node	Basic Flux(1)	Aperture Open(2)	Short λ(3)	Long λ(4)
Bezel	302	0.0	0.288	0.0	0.0
"	303	0.0	0.749	0.0	0.0
"	314	0.0	1.023	0.0	0.0
HRM, S λ	383	0.0	0.0	3.043	0.0
HRM, L λ	387	0.0	0.0	0.0	3.043
Grating	389	0.0	6.026	0.0	0.0
Bezel	394	0.0	0.288	0.0	0.0
Elect.	399	10.094	0.0	0.0	0.0
HRM, Door	400	0.0	2.678	0.0	0.0
TCS cont.	2301	0.40068	0.0	0.0	0.0
" "	2302	0.40068	0.0	0.0	0.0
" "	2303	0.32798	0.0	0.0	0.0
" "	2304	0.27099	0.0	0.0	0.0
" "	2305	9.28020	0.0	0.0	0.0
" "	2306	0.27099	0.0	0.0	0.0
" "	2307	0.29658	0.0	0.0	0.0
" "	2308	0.30751	0.0	0.0	0.0
TCS Elec.	2309	2.046	0.0	0.0	0.0

(1) Basic flux used for ready, standby or hold

(2) Read K214-82A if ≥ 3.5 VDC add fluxes listed
if < 3.5 VDC no change use basic flux

(3) Read K213-82A if ≥ 3.5 VDC add flux listen
if < 3.5 VDC no change

(4) Read K212-82A if ≥ 3.5 VDC add flux listed
if < 3.5 VDC no change

NRL-A
THERMAL ANALYTICAL MODEL
NOMINAL DATA DECK LISTING

```
NRL A FLIGHT DAY 147 19 30        5-30-73
NRL A FLIGHT DAY 147 19 30        5-30-73
0.0      1.500      .0030      1.0        1.0      0.0333334
9999999999
  17    1   3.702     SPAR, ATM
  18    1   3.702
  19    1    3.702
  20    1   3.702
  21    1   3.753
  22    1   3.753
  23    1   3.753
  24    1   3.753
  25    1   3.702
  26    1   3.702
  27    1   3.702
  28    1   3.702
  29    1   3.753
  30    1   3.753
  31    1   3.753
  32    1   3.753     SPAR, ATM
  65                  INSULATION, SPAR ATM
  66
  67
  68
  69
  70
  71
  72
  73
  74
  75
  76
  77
  78
  79
  80
  81                  INSULATION, SPAR ATM
 125    1             CANISTER WALL, ATM
 126    1
 127    1
 128    1
 129    1
 130    1
 131    1
 132    1             CANISTER WALL, ATM
 139                  CLOSE OUT NODE BETWEEN SPAR AND CANISTER
 145    1   1.380     CANISTER SUN END
 146    1   1.602     CANISTER SUN END
 153    1   1.380     CANISTER MDA END
 154    1   1.602     CANISTER MDA END
 301        0.0       INSTRUMENT APERTURE
```

```
        1         2         3         4         5         6         7         8
12345678901234567890123456789012345678901234567890123456789012345678901234567890

 302    0   0.09311   CASE FWD RIGHT   (AROUND APERTURE)
 303    0   0.19105   CASE FWD BOTTOM  (AROUND APERTURE)
 304    0   0.18266   CASE BOTTOM RIGHT FWD
 305    0   0.34545    "      "       "
 306    0   0.21062    "      "       "
 307    0   0.08389    "      "       "
 308    0   0.05161   CASE BOTTOM RIGHT AFT
 309    0   0.45959   CASE SIDE RIGHT AFT
 310        0.48883    "    "      "
 311        0.48017    "    "      "
 312        0.45293    "    "      "
 313    0   0.97527   CASE SIDE RIGHT FWD
 314    0   0.17407   CASE  FWD  LEFT    (AROUND APERTURE)
 315    0   0.19809   CASE  TOP RIGHT FWD
 316    0   0.59942    "     "    "
 317    0   0.43378    "     "    "
 318    0   0.29745    "     "    "
 319    0   0.12755   CASE  TOP RIGHT AFT
 320    0   0.08526   CASE  AFT RIGHT
3321    0   0.274 0    "     "  MID-RT
 322    0   0.15664   CASE BOTTOM MID-RT AFT
 323        0.34669    "      "       "
 324        0.55712    "      "       "
 325        0.59825    "      "       "
 326    0   0.15113   CASE BOTTOM MID-RT FWD
 327    0   0.19233   CASE  TOP MID-LEFT FWD
 328        0.55156    "     "      "
 329        0.44643    "     "      "
 330        0.64253    "     "      "
 331    0   0.19546   CASE  TOP MID-LEFT AFT
 332    0   0.27674   CASE  AFT MID-LEFT
 333    0   0.29557   CASE BOTTOM MID-LEFT AFT
 334    0   0.61152    "      "       "
 335    0   0.60650    "      "       "
 336    0   0.43688    "      "       "
 337    0   0.09209   CASE BOTTOM MID-LEFT FWD
 338    0   0.17529   CASE  TOP MID-LEFT FWD
 339    0   0.37840    "     "      "
 340    0   0.60368    "     "      "
 341    0   0.57499    "     "      "
 342    0   0.23606   CASE  TOP MID-LEFT AFT
 343    0   0.13163   CASE  AFT LEFT
 344    0   0.05891   CASE BOTTOM LEFT AFT
 345    0   0.29477    "      "    "
 346    0   0.17149    "      "    "
 347    0   0.14598    "      "    "
 348    0   0.03081   CASE BOTTOM LEFT FWD
 349    0   0.09460   CASE  TOP LEFT FWD
 350    0   0.36624    "     "    "
 351    0   0.37389    "     "    "
 352    0   0.33993    "     "    "
 353    0   0.30222   CASE  TOP LEFT AFT
```

```
         1         2         3         4         5         6         7         8
12345678901234567890123456789012345678901234567890123456789012345678901234567890
  354    0   1.17030   TRIPOD MOUNT AFT                                          156
  355    0   0.31554   CASE  SIDE  LEFT AFT                                     157
  356        0.75884    "     "     "                                          158
  357        0.87219    "     "     "                                          159
  358        0.74185                                                           160
  359    0   0.66078   CASE  SIDE  LEFT FWD                                     161
  360    0   0.20241   CASE AROUND CAMERA                                      162
  361       0.2430     CAMERA, SIDE  (HANDLE)                                  163
  362       0.719       "     TOP                                             164
  363       0.159       "     SIDE  LEFT                                      165
  364       0.751       "     BOTTOM                                          166
  365       0.267       "     SIDE  MOTOR END                                 167
  370       0.1475    CAMERA  MOTOR MOUNT PLATE                               168
  371    0   0.11031   CASE  AROUND CAMERA FWD                                 169
  372    0   0.15451    "       "      "    "                                  170
  373    0   0.17171    "       "      "    "                                  171
  374    0   0.24431   CASE  AROUND CAMERA FWD                                 172
  375       .23210     CAMERA INTERNAL                                         173
  376       .23212     CAMERA INTERNAL                                         174
  377       2.81       CAMERA FILM                                             175
  378       .00406     CAMERA INTERNAL                                         176
  379       .00406      "      "                                              177
  380       .00812     CAMERA INTERNAL                                         178
  381    0   0.13449   CASE  UNDER CAMERA  OPPOSITE CAMERA                     179
  382    0   0.28579    "     "     "       "      "                          180
  383       0.129280   HEAT REJ. MIRROR, SHORT λ, FRONT                        181
  384       0.204600    "    "     "      "   λ   AFT                         182
  385       4.500000   HEAT REJ. MIRROR, SHORT λ, DRIVE MOTOR                  183
  386       0.012240   MONOPOD MOUNT                                           184
  387       0.129280   HEAT REJ. MIRROR, LONG λ, FWD                           185
  388       0.129280    "    "     "      "  λ  AFT                           186
  389       0.203500   PRIMARY GRATING  FRONT                                  187
  390       0.203500     "       "      AFT                                    188
  391       0.090620     "       "      DRIVE MOTOR                            189
  392       0.090220   PRIMARY GRATING  DRIVE MOTOR                           190
  393       0.0920     CAMERA DRIVE MOTOR                                      191
  394    0   0.09311   CASE BETWEEN APERTURE & CAMERA                          192
  395       .59        CAMERA HANDLE  TOP                                      193
  396       .59          "       "    BOTTOM                                  194
  397       1.45         "    GUIDE  RAIL                                     195
  398       .25        CAMERA HANDLE  LEVER                                    196
  399       5.         ELECTRONICS BOX                                         197
  400       .25        APERTURE HEAT REJECTION MIRROR                          198
  613    0   0.6910    BIPOD MOUNT                                             199
  654    0   0.9835    TRIPOD MOUNT                                            200
  659    0   0.2990    MONOPOD MOUNT                                           201
 1020       0.234      CAMERA INTERNAL                                         202
 1021    1               "       "                                            203
 1025                   CANISTER APERTURE NODE                                  204
 2001       0.1413     HEATER PANEL  TOP  RT  FWD   #5                        205
 2002       0.1249       "      "    "   "       #5                          206
 2003       0.1873       "      "    "   "       #4                          207
```

```
        1         2         3         4         5         6         7         8
12345678901234567890123456789012345678901234567890123456789012345678901234567890

2004      0.1404      HEATER PANEL  TOP  RT  AFT,  #2
2005      0.1326        "      "     "   LEFT  FWD, #6
2006      0.1224        "      "     "    "          #6
2007       0.125A       "      "     "    "          #3
2008       0.1314       "      "     "    "    AFT, #1
2009       0.1584       "      "   SIDE  FWD,     #7
2010       0.1846     HEATER PANEL  SIDE  AFT,     #8
2301      0.0311      TCS CONTROLLER FOR 2001 & 2002
2302      0.0311       "      "       "  2005 & 2006
2303      0.0311       "      "       "  2003
2304      0.0311       "      "       "  2007
2305      0.0311       "      "       "  2004
2306      0.0311       "      "       "  2008
2307      0.0311       "      "       "  2009
2308      0.0311       "      "       "  2010
2309       3.6       TCS PWR SUPPLY ELECTRONICS
3309      0          INSULATION OVER 309
3310      0              "      "   310
3311      0              "      "   311
3312      0              "      "   312
3313      0              "      "   313
3354                 TRIPOD MOUNT INSULATION AFT
3355                 INSULATION OVER 355
3356                     "      "   356
3359      0          MONOPOD INSULATION OVER NODE 359
3400                 HEAT REJ. MIRROR INSULATION
5313                 BIPOD INSULATION & OVER NODE 313
5381         .123    CAMERA FACE OPPOSITE CASE
5382         .246      "     "      "      "
6001                 MINISKIRT AT NODE 313
6002                 MINISKIRT, EXTERNAL RT FWD
6003                     "          "     "
6004                     "          "     "
6005                     "          "     "  AFT
6010                     "          "     LEFT AFT
6011                     "          "     LEFT
6012                     "          "      "
6013                     "          "      "
6015                     "          "     FWD LEFT
6016                     "          "      "
6017                     "          "      "
6018                 MINISKIRT EXTERNAL FWD RIGHT
7002                 MINISKIRT INTERNAL OF 6002
7003                     "          "     " 6003
7004                     "          "     " 6004
7005                     "          "     " 6005
7010                     "          "     " 6010
7011                     "          "     " 6011
7012                     "          "     " 6012
7013                     "          "     " 6013
7015                     "          "     " 6015
7016                 MINISKIRT INTERNAL OF 6016
```

```
         1         2         3         4         5         6         7         8
12345678901234567890123456789012345678901234567890123456789012345678901234567890

 7017                  MINISKIRT  OF 6017
 7018                  MINISKIRT INTERNAL OF 6018
 7313                  INSULATION OVER 313  OUTSIDE
 7354                      "       "   354  OUTSIDE
 7359                  INSULATION OVER 359  OUTSIDE
 9000                  AS & E
 9001                  AS & E
 9002                  AS & E
 9003                  AS & E
 9004                  AS & E
 9005    1             FINE SUN SENSOR
 9006                  AS & E
9999999999
 1025   0.0      0.91667     APERTURE OPEN & CLOSE TIMES
999999999999999            THERMAL CONTROL SYSTEM HEATER DATA
 2001     14.6      70.        73.5      0.       1.0
 2001                        315  316  327  328
 2002     13.0      70.        73.5      0.       1.0
 2001                        316  317  328  329
 2003     19.5      70.        71.5      0.       0.9
 2003                        317  318  329  330
 2004     14.1      70.        71.5      0.       0.9
 2004                        318  319  330  331
 2005     14.2      70.        73.5      0.       1.0
 2005                        338  339  349  350
 2006     13.2      70.        73.5      0.       1.0
 2005                        339  340  350  351
 2007     13.1      70.        71.5      0.       1.0
 2007                        340  341  351  352
 2008     13.1      70.        71.5      0.       0.9
 2008                        341  342  352  353
 2009     16.0      70.        72.5      0.       1.0
 2009                        358
 2010     17.2      70.        71.5      0.       0.9
 2010                        357
999999999999999            B_N-M - RADIATION EXCHANGE FACTORS - FT^2
   17   67.23480E-02   17   68.12620E-02   17   71.33380E-02   17   81.76700E-03
   18   68.41350E-02   18   69.14070E-02   18   71.21720E-02   18   72.11660E-02
   19   69.42940E-02   19   72.30700E-02   20   69.10020E-02   20   69.22830E-02
   20   70.29510E-02   20   72.11300E-02   21   65.21640E-02   21   67.23020E-02
   21   68.16940E-02   21   81.24400E-02   22   65.14080E-02   22   66.96500E-03
   22   68.41350E-02   22   69.20100E-02   23   66.46050E-02   23   69.39140E-02
   24   66.29870E-02   24   69.16500E-03   24   69.96000E-03   24   70.44060E-02
   25   73.38180E-02   25   74.19370E-02   25   77.10690E-02   25   78.54200E-03
   26   74.37440E-02   26   75.20100E-02   26   78.10480E-02   26   79.56200E-03
   27   75.57550E-02   27   79.16110E-02   28   75.26670E-02   28   76.30900E-02
   28   79.74600E-03   28   80.86400E-03   29   77.56520E-02   29   78.29690E-02
   30   78.55430E-02   30   79.29750E-02   31   79.85190E-02   32   79.39470E-02
   32   80.45710E-02   65   81.55600E-01   65  125.96990E 00   65  127.31300E-01
   65  139.34490E-01   65  145.79130E-01   65  359.25190E-01   65  360.38380E-03
   65  361.25100E-02   65  362.22280E-01   65  365.46650E-02   65  370.17320E-02
   65  373.34010E-03   65  393.81750E-02   65  396.10350E-02   65  396.27650E-02
```

B_{N-M} - RADIATION EXCHANGE FACTORS - FT^2

1	2	3	4	5	6	7	8	
65	398.13540E-02	65	2009.15180E-01	65	2307.16910E-02	65	3359.86170E-01	312
65	6013.10560E 00	65	6015.36150E-02	65	6016.29830E-02	66	125.25360E 00	313
66	126.18600E 01	66	128.11850E 00	66	129.10820E 00	66	130.87680E-01	314
66	153.10590E 00	66	342.39020E-04	66	352.76230E-03	66	352.84110E-04	315
66	353.29450E-03	66	353.81220E-04	66	399.52480E-01	66	2008.13650E-03	316
66	2008.81500E-04	66	2010.38160E-01	66	2307.87370E-03	66	2308.21810E-02	317
66	2309.55350E-02	66	3355.14760E-01	66	3356.15350E 00	66	6010.53280E-01	318
66	6011.13150E 00	66	6012.13090E 00	67	73.85760E-01	67	77.34620E-01	319
67	81.15350E 00	67	125.82080E 00	67	127.13580E 00	67	139.52990E-01	320
67	145.20500E 00	67	146.16980E 00	67	301.24910E-01	67	302.96570E-04	321
67	303.21690E-02	67	314.95510E-03	67	361.94840E-02	67	362.27670E-01	322
67	363.32230E-02	67	373.13710E-02	67	396.11650E-02	67	396.19490E-01	323
67	397.65850E-01	67	398.86730E-02	67	400.49950E-02	67	1025.10390E-01	324
67	3400.29950E-01	67	6015.14280E-02	67	6016.52090E-02	67	6017.11390E-01	325
67	6018.29280E-01	67	9001.26910E 00	67	9005.81260E-01	68	304.15970E 00	326
68	305.56770E 00	68	306.63520E-02	68	313.65690E-03	68	324.94870E-02	327
68	325.75850E 00	68	326.18800E 00	68	335.91550E-02	68	336.74890E 00	328
68	337.15830E 00	68	347.26980E 00	68	348.50920E-01	68	359.91750E-03	329
68	7002.14040E 00	68	7003.71780E-02	68	7012.40140E-02	68	7013.13910E 00	330
68	7015.15960E-01	68	7016.41600E-01	68	7017.43500E-01	68	7018.32470E-01	331
68	7313.41390E-01	68	7313.55540E-01	68	7359.60800E-01	68	7359.25950E-01	332
69	305.67240E-02	69	306.41290E 00	69	307.17080E 00	69	308.57930E-01	333
69	322.23400E 00	69	323.50420E 00	69	324.68570E 00	69	325.99680E-02	334
69	333.26030E 00	69	334.68890E 00	69	335.82610E 00	69	336.92860E-02	335
69	344.78410E-01	69	345.19500E 00	69	346.27130E 00	69	347.30420E-02	336
69	354.13700E-01	69	7002.29560E-02	69	7003.13730E 00	69	7004.12940E 00	337
69	7005.68840E-01	69	7010.52140E-01	69	7011.12860E 00	69	7012.15870E 00	338
69	7013.29660E-02	69	7354.29600E-01	69	7354.30470E 00	69	7354.12790E-01	339
69	7354.28590E-01	69	7354.71330E-02	70	76.31950E 00	70	80.15200E 00	340
70	126.92880E 00	70	128.10280E 00	70	130.15210E 00	70	131.95080E-01	341
70	132.74410E-01	70	139.81650E-01	70	153.42430E 00	70	154.41890E 00	342
70	309.63650E-02	70	2309.50940E-02	70	3309.14460E-01	70	3354.55950E 00	343
70	3355.39640E-02	70	6010.67480E-02	70	9003.19520E 00	71	73.21080E 00	344
71	74.34420E 00	71	78.64260E-01	71	127.59710E-01	71	146.95860E-01	345
71	301.55900E-02	71	303.55510E-03	71	313.22640E-01	71	314.19180E-03	346
71	363.11950E-02	71	397.15620E-01	71	400.32100E-02	71	1025.64630E-02	347
71	3312.20290E 00	71	3313.99570E-02	71	3400.58360E-01	71	5313.12060E 00	348
71	6001.91520E-02	71	6002.12340E 00	71	6018.33900E-02	71	9001.23400E 00	349
71	9002.53870E-01	71	9005.30780E 00	71	9006.35340E 00	72	75.82310E 00	350
72	79.12760E 00	72	132.67380E-01	72	3309.86880E-01	72	3310.21640E 00	351
72	3311.23520E 00	72	6003.11810E 00	72	6004.10920E 00	72	6005.57880E-01	352
72	9002.22320E 00	72	9003.48480E-01	72	9004.45120E-01	73	125.14360E 00	353
73	139.28520E-01	73	145.50010E-01	73	146.93340E-01	73	303.32630E-02	354
73	314.36500E-02	73	315.34680E-02	73	316.45920E-03	73	327.79190E-04	355
73	400.25810E-01	73	1025.60180E-02	73	2001.59280E-04	73	2002.22830E-05	356
73	3400.12490E 00	73	5313.10260E 00	73	6018.41650E-02	73	9001.19480E 00	357
73	9005.17310E 00	74	125.10360E 00	74	315.91090E-02	74	315.28390E-02	358
74	316.12050E-02	74	316.47170E-01	74	317.31250E-02	74	327.20790E-03	359
74	2001.15560E-03	74	2001.38900E-04	74	2002.28100E-03	74	2002.59970E-05	360
74	2003.30670E-04	74	3311.75110E-01	74	3312.51180E 00	74	3313.48610E-01	361
74	3400.22420E-01	74	5313.17910E 00	74	6001.66890E-02	74	6002.68570E-01	362
74	6003.12570E-01	74	9001.22090E 00	74	9002.82090E-01	74	9006.22180E 00	363

B_{N-M} - RADIATION EXCHANGE FACTORS - FT^2

1	2	3	4	5	6	7	8	
75	79.74030E-01	75	126.85730E-01	75	128.48170E-01	75	315.30290E-03	364
75	316.50320E-02	75	316.52580E-02	75	317.52160E-01	75	317.33340E-03	365
75	318.67130E-01	75	319.23100E-01	75	331.25640E-02	75	2001.41500E-04	366
75	2002.27110E-03	75	2002.29980E-04	75	2003.32720E-05	75	2003.27900E-03	367
75	2003.61130E-03	75	2004.41780E-03	75	2004.63060E-03	75	3309.41900E 00	368
75	3310.81360E 00	75	3311.71440E 00	75	3312.69570E-01	75	3354.49530E-01	369
75	6002.12580E-01	75	6003.13050E 00	75	6004.13950E 00	75	6005.71870E-01	370
75	9002.47210E 00	75	9003.11720E 00	76	126.21100E 00	76	130.31120E-01	371
76	131.28060E-01	76	153.10590E 00	76	154.23850E 00	76	319.42300E-02	372
76	319.25590E-03	76	331.17410E-03	76	331.26630E-02	76	331.46940E-03	373
76	342.29400E-03	76	342.16500E-02	76	353.20060E-03	76	2004.71760E-04	374
76	2004.76490E-04	76	2004.55640E-05	76	2008.49650E-04	76	3309.64830E-01	375
76	3354.29410E 00	76	6005.11490E-01	76	9003.81850E-01	77	127.41860E 00	376
77	146.18480E 00	77	301.30980E-02	77	315.38810E-02	77	316.51380E-03	377
77	327.88610E-05	77	363.81170E-03	77	371.12090E-03	77	395.19830E-02	378
77	400.16380E-01	77	1025.87680E-02	77	2001.66330E-04	77	2002.25550E-05	379
77	3400.88730E-02	77	9001.21140E 01	77	9005.62390E-01	78	125.14920E 00	380
78	127.11810E 01	78	315.22590E-01	78	315.60140E-02	78	316.99920E-01	381
78	316.29900E-02	78	316.10700E-02	78	317.17130E-01	78	317.66190E-02	382
78	327.51570E-03	78	2001.88610E-03	78	2001.82400E-03	78	2001.13450E-01	383
78	2002.89040E-04	78	2002.99590E-02	78	2002.59530E-03	78	2002.14870E-04	384
78	2003.64970E-04	78	2003.20070E-03	78	2005.30030E-02	78	2006.30660E-02	385
78	3301.25740E-02	78	3311.64930E-01	78	3312.19580E 00	78	3313.23880E-01	386
78	5313.53870E-01	78	6001.17040E-02	78	6002.12100E-01	78	9001.17350E 01	387
78	9002.32940E 00	78	9006.37330E-01	79	125.16130E 00	79	126.41950E 00	388
79	127.36190E 00	79	128.41290E-01	79	129.29040E 00	79	130.18410E 00	389
79	132.10890E 01	79	315.69930E-03	79	316.14940E-01	79	316.66540E-02	390
79	317.10650E-00	79	317.98980E-03	79	318.65670E-01	79	319.45400E-01	391
79	331.50380E-02	79	2001.12320E-03	79	2002.70920E-02	79	2002.89020E-04	392
79	2002.55360E-03	79	2003.27290E-03	79	2003.23060E-01	79	2005.12480E-02	393
79	2003.97150E-05	79	2004.61690E-03	79	2004.82100E-03	79	2004.17000E-01	394
79	2006.22430E-02	79	2007.44620E-02	79	2008.55100E-02	79	2303.51400E-02	395
79	2304.17780E-02	79	2305.42950E-02	79	2306.12300E-02	79	3309.66190E-01	396
79	3310.11140E 00	79	3311.18090E 00	79	3312.32360E-01	79	6003.13700E-01	397
79	6004.76710E-02	79	6005.36570E-02	79	9002.23280E 01	79	9003.83400E 00	398
79	9004.41640E 00	80	126.21030E 00	80	130.14520E 00	80	131.94370E-01	399
80	132.45210E 00	80	139.59320E-01	80	153.13060E 00	80	154.41820E 00	400
80	319.11650E-01	80	319.64500E-03	80	331.40880E-03	80	331.12920E-02	401
80	331.67120E-02	80	342.38750E-02	80	342.74120E-03	80	353.47120E-03	402
80	2004.21060E-03	80	2004.13060E-04	80	2004.18080E-03	80	2004.27950E-02	403
80	2008.11650E-03	80	2305.24100E-02	80	3309.19150E-01	80	3354.10180E 00	404
80	9003.61500E 00	81	125.23050E 00	81	145.88160E-01	81	146.36610E-01	405
81	301.87320E-02	81	302.37500E-03	81	303.10880E-01	81	314.19890E-02	406
81	360.17600E-03	81	362.11700E 00	81	363.78920E-03	81	370.75870E-03	407
81	373.38720E-02	81	393.17230E-02	81	396.31390E-01	81	396.56290E-02	408
81	397.25950E-01	81	398.21090E-02	81	400.11690E-02	81	3359.19880E-01	409
81	6015.16450E-01	81	6016.43960E-01	81	6017.42020E-01	81	6018.50410E-02	410
81	9001.33740E-01	125	126.26170E 00	125	127.11890E 01	125	128.26490E-01	411
125	129.10270E 00	125	139.25140E 01	125	145.10300E 01	125	146.30790E 00	412
125	301.50130E-02	125	302.28420E-04	125	303.31480E-03	125	314.98500E-03	413
125	315.71920E-02	125	315.65060E-03	125	316.95200E-03	125	327.16410E-03	414
125	327.16910E-01	125	327.71210E-03	125	338.28410E-01	125	338.30950E-02	415

B_{N-M} - RADIATION EXCHANGE FACTORS - FT^2

1	2	3	4	5	6	7	8	
125	349.43490E-01	125	349.30830E-02	125	349.13410E-02	125	350.22560E-00	416
125	351.78930E-01	125	351.78930E-01	125	360.17790E-02	125	361.17570E-01	417
125	362.17140E-01	125	363.84930E-03	125	364.85940E-01	125	365.21640E-01	418
125	370.98230E-02	125	371.14490E-02	125	373.45970E-03	125	393.43970E-01	419
125	395.33980E-01	125	395.18470E-00	125	396.22560E-01	125	396.53630E-01	420
125	397.81050E-00	125	398.11830E-00	125	400.10780E-01	125	1025.17440E-01	421
125	2001.12290E-03	125	2001.27080E-03	125	2001.19770E-01	125	2002.14290E-01	422
125	2002.47340E-05	125	2003.75290E-02	125	2005.46870E-01	125	2005.18720E-02	423
125	2005.41660E-03	125	2005.71120E-03	125	2006.24290E-03	125	2006.16340E-02	424
125	2006.38410E-01	125	2006.24290E-03	125	2007.13090E-02	125	2007.13090E-02	425
125	2007.91800E-02	125	2009.10850E 00	125	2010.30240E-01	125	2301.46490E-02	426
125	2302.10110E-01	125	2307.26360E-01	125	2308.23230E-01	125	3359.49250E 00	427
125	3400.99120E-02	125	6012.50350E-01	125	6013.16160E 00	125	6015.93960E-02	428
125	6016.17180E-01	125	6017.10040E-01	125	6018.39460E-02	125	9001.15440E 01	429
125	9002.44190E 00	125	9005.83330E-01	126	128.28130E 00	126	129.36520E 00	430
126	130.28880E 00	126	131.67570E-01	126	132.25290E 00	126	139.24130E 01	431
126	153.11370E 01	126	154.50550E 00	126	319.47760E-03	126	331.49710E-02	432
126	331.78400E-03	126	342.61430E-02	126	342.54880E-03	126	342.74310E-02	433
126	351.18960E-00	126	352.13240E-01	126	352.15480E-00	126	353.16490E-01	434
126	353.40070E-01	126	353.90360E-03	126	399.81060E-01	126	2002.43790E-02	435
126	2003.21440E-01	126	2004.25050E-04	126	2004.13390E-03	126	2004.15540E-01	436
126	2006.58350E-03	126	2006.56690E-02	126	2007.30820E-01	126	2007.31440E-02	437
126	2008.22350E-03	126	2008.27560E-01	126	2008.12830E-02	126	2008.27740E-02	438
126	2010.93770E-01	126	2303.84120E-02	126	2304.81530E-02	126	2305.36760E-02	439
126	2306.59490E-02	126	2307.84870E-03	126	2308.39400E-02	126	2309.13550E-01	440
126	3354.28180E 00	126	3355.82720E-01	126	3356.41840E 00	126	6010.38650E-01	441
126	6011.11200E 00	126	6012.14330E 00	126	9002.10500E 01	126	9003.82630E 00	442
127	128.29250E-01	127	129.90830E-01	127	139.24640E 01	127	145.49840E 00	443
127	146.46840E 00	127	301.68420E-02	127	302.13570E-03	127	314.30990E-02	444
127	315.64480E-03	127	315.25410E-02	127	316.33640E-03	127	327.58010E-04	445
127	327.16760E-01	127	327.59430E-03	127	338.45980E-03	127	338.15730E-01	446
127	349.74280E-03	127	349.64590E-02	127	349.20000E-03	127	350.14630E-01	447
127	360.85030E-03	127	361.25380E-02	127	364.51180E-01	127	365.24820E-02	448
127	370.68200E-03	127	371.11510E-02	127	393.34290E-02	127	395.16460E-01	449
127	395.14880E-00	127	397.24090E-00	127	398.42600E-01	127	1025.49310E-02	450
127	2001.43430E-04	127	2001.26840E-03	127	2001.30810E-01	127	2002.16730E-05	451
127	2002.29390E-01	127	2003.16400E-01	127	2005.23070E-03	127	2005.41710E-01	452
127	2005.10560E-03	127	2005.12140E-03	127	2006.33500E-01	127	2006.10600E-03	453
127	2006.10600E-03	127	2007.13180E-01	127	2301.67280E-02	127	2302.12700E-01	454
127	2303.12380E-02	127	2304.11300E-02	127	3359.23680E-01	127	9000.15360E-02	455
127	9001.38330E 01	127	9002.10970E 01	127	9004.14480E 00	128	129.43320E-01	456
128	139.91680E-01	128	154.95390E-01	128	154.74070E-01	128	319.10950E-03	457
128	331.11400E-02	128	331.17820E-03	128	342.98070E-03	128	342.16890E-02	458
128	342.12590E-03	128	351.11570E-01	128	352.21130E-02	128	352.17990E-01	459
128	353.20540E-03	128	353.63960E-02	128	353.19170E-02	128	399.48350E-02	460
128	2003.88740E-02	128	2004.20720E-04	128	2004.58440E-02	128	2004.56950E-05	461
128	2006.35620E-04	128	2007.91830E-02	128	2007.19190E-03	128	2008.93930E-02	462
128	2008.20480E-03	128	2008.32240E-03	128	2008.50820E-04	128	2303.17650E-02	463
128	2304.28570E-02	128	2305.13810E-02	128	2306.22580E-02	128	2309.88520E-03	464
128	3354.30170E-01	128	3355.15330E-02	128	9002.19950E 00	128	9004.11490E 00	465
129	139.12590E 00	129	153.45260E-01	129	342.33090E-03	129	351.13020E-01	466
129	352.17370E-01	129	352.71330E-03	129	353.21580E-02	129	353.18510E-02	467

B_{N-M} - RADIATION EXCHANGE FACTORS - FT^2

1	2	3	4	5	6	7	8	
123456789	123456789	123456789	123456789	123456789	123456789	123456789	123456789	
129 399.45250E-02	129 2002.58630E-02	129 2008.26850E-01	129 2004.61560E-02					468
129 2006.63920E-02	129 2006.40090E-04	129 2007.21460E-01	129 2007.21600E-03					469
129 2008.31130E-03	129 2008.69110E-04	129 2008.17300E-01	129 2303.50900E-02					470
129 2304.84040E-02	129 2306.10450E-02	129 9002.10490E 01	129 9003.81550E-01					471
129 9004.98050E-01	130 139.11960E 00	130 153.14040E 00	130 154.16200E 00					472
130 319.21680E-03	130 331.36280E-03	130 331.22560E-02	130 342.34380E-02					473
130 342.14310E-02	130 342.24910E-03	130 352.30840E-02	130 352.14770E-01					474
130 353.93340E-02	130 353.15740E-02	130 353.41810E-03	130 399.58940E-02					475
130 2004.60810E-04	130 2004.80280E-02	130 2004.11590E-04	130 2008.26470E-03					476
130 2008.13980E-01	130 2008.10340E-03	130 2008.29890E-03	130 2304.14390E-02					477
130 2305.30540E-02	130 2306.58530E-02	130 2309.12450E-02	130 3354.51970E-01					478
130 3355.17370E-02	130 9002.17530E 00	130 9003.66470E 00	131 139.79760E-01					479
131 153.19060E 00	131 154.16470E 00	131 319.11320E-03	131 331.11780E-02					480
131 331.19430E-03	131 342.18420E-02	131 342.13010E-03	131 342.29160E-03					481
131 352.62840E-03	131 353.22400E-03	131 353.19010E-02	131 2004.31760E-04					482
131 2004.62120E-05	131 2008.55430E-04	131 2008.60900E-04	131 2306.79100E-03					483
131 3354.34180E-01	131 9003.63270E-01	132 139.20480E 01	132 154.43540E 00					484
132 2007.40100E-02	132 2304.71630E-03	132 9002.10600E 01	132 9003.66400E 00					485
132 9004.34040E 00	139 145.63950E 00	139 146.14420E 01	139 153.55880E 00					486
139 154.12520E 01	139 351.68750E-03	139 360.15760E-03	139 361.24960E-02					487
139 365.17250E-02	139 370.10230E-02	139 393.60290E-02	139 395.14120E-02					488
139 397.15840E-01	139 398.45510E-02	139 399.40520E-02	139 1025.22550E-01					489
139 2006.21150E-04	139 2007.11400E-03	139 2009.11380E-01	139 2010.79470E-02					490
139 2307.51730E-02	139 2308.64550E-02	139 3356.18650E-01	139 3359.58360E-01					491
139 9000.25610E-02	139 9001.40080E 00	139 9003.15370E 00	139 9004.29590E-01					492
139 9005.32230E-01	145 146.10100E 00	145 301.46390E-02	145 302.23020E-03					493
145 303.45000E-02	145 314.48180E-02	145 315.26540E-03	145 315.29140E-02					494
145 316.38570E-03	145 327.66530E-04	145 327.20620E-03	145 327.68980E-02					495
145 338.20870E-03	145 338.82280E-02	145 349.38840E-03	145 349.29320E-02					496
145 360.12710E-02	145 361.27170E-01	145 362.72530E-02	145 364.14200E-01					497
145 370.43110E-03	145 371.47790E-02	145 373.36330E-02	145 393.27370E-02					498
145 395.42480E-02	145 395.85460E-03	145 396.22270E-02	145 396.10960E-02					499
145 397.74370E-01	145 398.11980E-01	145 400.13300E-01	145 2001.11050E-03					500
145 2001.49800E-04	145 2002.19180E-05	145 2005.47950E-04	145 2005.12060E-03					501
145 2302.69610E-03	145 3359.18050E-01	145 6015.43970E-02	145 6016.10020E-01					502
145 6017.79210E-02	145 6018.52260E-02	145 9000.31280E-02	145 9001.32980E 00					503
145 9005.46670E-01	146 301.15670E-01	146 302.51150E-03	146 303.73560E-02					504
146 314.10350E-01	146 315.42270E-02	146 315.16750E-03	146 316.55960E-03					505
146 327.96510E-04	146 327.50040E-04	146 327.43540E-02	146 338.19960E-02					506
146 349.94260E-04	146 361.26010E-02	146 363.15440E-02	146 371.25490E-02					507
146 373.52270E-02	146 395.17410E-02	146 395.27200E-03	146 396.14080E-02					508
146 397.26960E-01	146 398.32480E-02	146 400.63990E-01	146 1025.27110E-02					509
146 2001.72240E-04	146 2001.69760E-04	146 2002.27830E-05	146 2005.29270E-04					510
146 6015.74680E-03	146 6016.22390E-02	146 6017.55720E-02	146 6018.64370E-02					511
146 9000.30490E-01	146 9001.48080E 00	146 9005.19690E 00	153 319.58730E-03					512
153 331.89280E-03	153 331.61120E-02	153 342.67490E-03	153 342.10470E-02					513
153 342.84620E-02	153 352.22560E-02	153 352.51370E-02	153 353.10290E-02					514
153 353.68290E-02	153 353.54730E-03	153 399.69230E-02	153 2004.16470E-03					515
153 2004.28530E-04	153 2008.92040E-04	153 2008.25460E-03	153 2008.21860E-03					516
153 2305.79780E-03	153 2306.10320E-02	153 2309.43740E-02	153 3354.21320E 00					517
153 3355.32940E-02	153 6010.67780E-02	153 9003.21490E 00	154 319.43450E-02					518
154 319.10760E-02	154 331.46220E-03	154 331.11200E-01	154 331.11580E-02					519

B_{N-M} - RADIATION EXCHANGE FACTORS - FT^2

1	2	3	4	5	6	7	8	
154	342.65840E-03	154	342.10950E-01	154	342.12370E-02	154	352.14190E-02	520
154	353.42940E-02	154	353.13320E-02	154	2004.78570E-04	154	2004.30190E-03	521
154	2004.36930E-04	154	2008.32960E-03	154	2008.13750E-03	154	2305.10010E-02	522
154	2306.18710E-02	154	2309.18710E-02	154	3354.29410E 00	154	9003.34690E 00	523
301	302.19520E-04	301	304.17390E-01	301	305.85380E-02	301	312.11710E-01	524
301	313.31610E-01	301	314.19100E-03	301	315.16410E-01	301	316.84990E-02	525
301	325.69800E-02	301	326.75890E-02	301	327.74180E-02	301	328.71130E-02	526
301	336.28290E-02	301	339.32530E-02	301	358.62110E-02	301	363.46030E-02	527
301	397.63550E-02	301	400.94630E-03	301	9001.22930E-01	301	9005.41220E-02	528
302	304.42900E-02	302	305.19670E-02	302	313.16760E-01	302	315.40740E-02	529
302	316.19610E-02	302	325.12660E-02	302	326.83890E-03	302	327.84340E-03	530
302	328.12960E-02	302	358.13590E-02	302	397.29870E-04	302	9001.63900E-04	531
302	9005.10130E-04	303	304.91290E-01	303	312.66230E-02	303	313.22560E-01	532
303	315.57360E-02	303	316.62310E-02	303	326.56340E-02	303	327.32340E-02	533
303	328.52990E-02	303	359.26540E-02	303	358.42400E-02	303	397.16420E-03	534
303	3400.45780E-03	303	9001.73980E-03	303	9005.34960E-03	304	305.26440E-02	535
304	312.13430E-01	304	313.52010E-01	304	314.66760E-02	304	315.25940E-01	536
304	316.17870E-01	304	325.38760E-02	304	327.15250E-01	304	328.13760E-01	537
304	336.32990E-02	304	339.58010E-02	304	358.53330E-02	304	371.18670E-02	538
304	373.25920E-02	304	394.99440E-03	304	7002.25900E-02	304	7017.23970E-02	539
304	7018.21050E-01	304	7313.26590E-01	305	312.21280E 00	305	313.14060E-01	540
305	314.68570E-02	305	315.17970E-01	305	316.15050E 00	305	317.19020E-01	541
305	325.16030E-01	305	325.32100E-01	305	326.29860E-02	305	327.13590E-01	542
305	328.10170E 00	305	329.17900E-01	305	336.11730E-01	305	337.24850E-02	543
305	338.51390E-02	305	339.65500E-01	305	340.10470E-01	305	347.42310E-02	544
305	348.80070E-03	305	350.71630E-02	305	357.12320E-01	305	358.20510E-01	545
305	371.34140E-02	305	372.28620E-02	305	373.23050E-02	305	381.25150E-02	546
305	382.61170E-02	305	383.10500E-03	305	387.20020E-03	305	394.68820E-03	547
305	1021.61590E-03	305	7002.93950E-01	305	7013.33240E-02	305	7016.10060E-02	548
305	7017.15510E-02	305	7018.14910E-02	305	7313.24210E-02	305	7359.56450E-03	549
306	311.19340E 00	306	316.18750E-01	306	317.10560E 00	306	318.69640E-02	550
306	324.10730E-01	306	324.13890E-01	306	328.15640E-01	306	329.90370E-01	551
306	330.10190E-01	306	335.12410E-01	306	340.37450E-01	306	351.77800E-02	552
306	357.28550E-01	306	7003.87200E-01	306	7012.36830E-02	307	310.10720E 00	553
307	317.69490E-02	307	318.28320E-01	307	323.68350E-02	307	323.50300E-02	554
307	329.91620E-02	307	330.44100E-01	307	334.61070E-02	307	334.56040E-02	555
307	340.64690E-02	307	341.23460E-01	307	356.16140E-01	307	357.59790E-02	556
307	389.17060E-03	307	7004.64770E-01	308	309.40020E-01	308	319.53510E-02	557
308	320.53970E-02	308	321.87830E-02	308	322.19050E-02	308	330.49570E-02	558
308	331.12000E-01	308	332.24840E-02	308	333.16500E-02	308	341.50890E-02	559
308	342.46950E-02	308	355.34340E-02	308	356.27580E-02	308	390.28390E-02	560
308	2004.17000E-01	308	7005.28940E-01	308	7354.16410E-02	308	7354.33980E-02	561
309	319.40100E-01	309	320.32590E-01	309	321.57050E-01	309	322.65780E-01	562
309	323.15400E-01	309	330.15140E-01	309	331.65290E-01	309	332.25640E-01	563
309	333.25140E-01	309	334.18270E-01	309	341.17960E-01	309	342.25720E-01	564
309	343.64850E-02	309	344.59840E-02	309	345.45080E-02	309	352.46530E-02	565
309	353.63990E-02	309	355.45230E-01	309	356.37140E-01	309	389.42120E-03	566
309	390.21590E-01	309	391.68510E-02	309	392.34930E-02	309	3309.19080E-01	567
310	318.10700E 00	310	321.87420E-02	310	322.12980E-01	310	323.13140E 00	568
310	324.16570E-01	310	329.16320E-01	310	330.12920E 00	310	331.12870E-01	569
310	332.53110E-02	310	333.11800E-01	310	334.72390E-01	310	335.18550E-01	570
310	340.18330E-01	310	341.72410E-01	310	342.12030E-01	310	343.67980E-02	571

B_{N-M} - RADIATION EXCHANGE FACTORS - FT^2

1		2		3		4		5		6		7		8	
123456789	0	123456789	0	123456789	0	123456789	0	123456789	0	123456789	0	123456789	0	123456789	0
310	344.35710E-02	310	345.17240E-01	310	352.17360E-01	310	353.39140E-02								572
310	355.28190E-01	310	356.14730E 00	310	357.53160E-01	310	389.91790E-03								573
310	391.51810E-02	310	392.58420E-02	310	3910.34080E-01	311	316.11360E-01								574
311	317.19270E 00	311	324.11950E 00	311	325.17480E-01	311	328.17680E-01								575
311	329.11770E 00	311	334.12870E-01	311	335.59860E-01	311	336.12850E-01								576
311	339.14370E-01	311	340.59190E-01	311	341.12880E-01	311	346.17000E-01								577
311	350.48300E-02	311	351.17000E-01	311	356.39660E-01	311	357.14340E 00								578
311	358.35510E-01	311	385.25500E-02	311	387.46630E-03	311	5311.36280E-01								579
312	313.55190E-02	312	314.72030E-02	312	315.13290E-01	312	316.20910E 00								580
312	317.99030E-02	312	324.16890E-01	312	325.98380E-01	312	326.13050E-01								581
312	327.13100E-01	312	328.94810E-01	312	329.16470E-01	312	335.14770E-01								582
312	336.36890E-01	312	337.68860E-02	312	338.70060E-02	312	339.42700E-01								583
312	340.14560E-01	312	347.10550E-01	312	348.21330E-02	312	349.21490E-02								584
312	350.12460E-01	312	357.51050E-01	312	358.94730E-01	312	359.17650E-01								585
312	360.23290E-02	312	371.59550E-02	312	372.68400E-02	312	373.86050E-02								586
312	374.91550E-02	312	381.73580E-02	312	382.13730E-01	312	383.93830E-03								587
312	385.48570E-02	312	386.10620E-02	312	387.70180E-03	312	394.12200E-02								588
312	1021.15680E-02	312	3312.68800E-01	313	314.24640E-01	313	315.51350E-01								589
313	316.13830E-01	313	325.13470E-01	313	326.14680E-01	313	327.14680E-01								590
313	328.13670E-01	313	336.70860E-02	313	337.42180E-02	313	338.42540E-02								591
313	339.80750E-02	313	358.22100E-01	313	359.94360E-02	313	360.88670E-03								592
313	371.34670E-02	313	373.50680E-02	313	381.28370E-02	313	382.52750E-02								593
313	394.13140E-02	313	1021.60560E-03	313	3313.11840E-01	313	7313.20590E 00								594
314	315.52520E-01	314	325.57040E-02	314	326.35310E-02	314	327.61810E-02								595
314	336.22590E-02	314	358.45920E-02	314	397.21770E-03	314	3400.52520E-03								596
314	9001.22080E-02	314	9005.47760E-03	315	325.13550E-01	315	326.15070E-01								597
315	336.49950E-02	315	337.36030E-02	315	358.52570E-02	315	371.14850E-02								598
315	373.27290E-02	315	394.95120E-03	315	2001.10790E 00	315	2001.21360E-03								599
315	9001.47940E-02	315	9001.24890E-03	315	9001.91600E-04	315	9002.11030E-03								600
316	324.18040E-01	316	325.99790E-01	316	326.13350E-01	316	328.17420E-01								601
316	336.26700E-01	316	337.50090E-02	316	339.11360E-01	316	347.60940E-02								602
316	357.12340E-01	316	358.21410E-01	316	371.13680E-02	316	373.47910E-02								603
316	374.37020E-02	316	381.41670E-02	316	382.44230E-02	316	383.65750E-03								604
316	385.19710E-02	316	387.19940E-03	316	394.68620E-03	316	1021.61820E-03								605
316	2001.23440E-03	316	2001.23860E 00	316	2002.17070E-03	316	2002.20960E 00								606
316	9001.63470E-03	316	9001.41350E-02	316	9002.18330E-02	316	9002.33140E-03								607
316	9004.57660E-04	317	324.91400E-01	317	325.15650E-01	317	329.13700E-01								608
317	335.37740E-01	317	346.77590E-02	317	357.28530E-01	317	2002.15780E-03								609
317	2002.94100E-01	317	2003.19670E 00	317	2003.35700E-03	317	9001.27390E-03								610
317	9002.12140E-03	317	9002.53050E-02	317	9004.92310E-03	318	323.44750E-01								611
318	324.92850E-02	318	330.67140E-02	318	334.23410E-01	318	335.65290E-02								612
318	341.55960E-02	318	356.16120E-01	318	357.59700E-02	318	389.17200E-03								613
318	2003.22000E-01	318	2003.32200E-03	318	2004.27520E-03	318	9002.89730E-02								614
318	9003.11220E-02	319	320.54070E-02	319	321.87920E-02	319	322.12120E-01								615
319	323.50480E-02	319	332.24840E-02	319	333.46020E-02	319	334.30950E-02								616
319	355.32200E-02	319	356.27640E-02	319	390.28180E-02	319	2004.22160E-03								617
319	9354.31160E-04	319	9002.44630E-03	319	9003.21040E-02	319	9003.10650E-03								618
320	322.82620E-02	320	323.17170E-02	320	330.16870E-02	320	331.83510E-02								619
320	333.22840E-02	320	342.24270E-02	320	354.23100E-01	320	355.28640E-02								620
320	390.60390E-02	320	7354.57740E-01	321	322.37330E-01	321	331.37830E-01								621
321	335.15550E-01	321	342.16720E-01	321	354.12420E 00	321	355.13620E-01								622
321	356.61200E-02	321	390.41700E-01	321	7354.13820E 00	322	330.13350E-01								623

B_{N-M} - RADIATION EXCHANGE FACTORS - FT^2

1		2		3		4		5		6		7		8	
123456789	0	123456789	0	123456789	0	123456789	0	123456789	0	123456789	0	123456789	0	123456789	0
322	331.36360E-01	322	332.15240E-01	322	333.65820E-02	322	341.12580E-01								624
322	342.24480E-01	322	343.29050E-02	322	344.19750E-02	322	353.36730E-02								625
322	355.14060E-01	322	356.10070E-01	322	389.38390E-03	322	390.14470E-01								626
322	391.30810E-02	322	7005.19370E-01	322	7010.23890E-02	322	7354.50740E-03								627
322	7354.17430E-01	322	7354.18950E-02	322	7354.29080E-02	323	329.18680E-01								628
323	330.10900E 00	323	331.13590E-01	323	334.16790E-01	323	334.14180E-01								629
323	340.17470E-01	323	341.87570E-01	323	342.11410E-01	323	345.48190E-02								630
323	352.16240E-01	323	356.49300E-01	323	357.13500E-01	323	389.60220E-03								631
323	391.26890E-02	323	392.30290E-02	323	7004.27290E-01	323	7005.19930E-02								632
323	7011.58260E-02	323	7354.98800E-04	324	328.25700E-01	324	329.16990E 00								633
324	330.18640E-01	324	335.20460E-01	324	335.18170E-01	324	339.17520E-01								634
324	340.11750E 00	324	341.17660E-01	324	346.68760E-02	324	351.24300E-01								635
324	352.44290E-02	324	357.64880E-01	324	387.21350E-03	324	7003.15780E-01								636
324	7012.76450E-02	325	326.37980E-02	325	326.39660E-02	325	327.21780E-01								637
325	328.18120E 00	325	329.25190E-01	325	336.15600E-01	325	336.18180E-01								638
325	337.33300E-02	325	338.13050E-01	325	339.99820E-01	325	340.20590E-01								639
325	347.57040E-02	325	347.48820E-02	325	348.10750E-02	325	349.26870E-02								640
325	350.19370E-01	325	357.17460E-01	325	358.35130E-01	325	359.75210E-02								641
325	360.10320E-02	325	371.49460E-02	325	372.55810E-02	325	373.36910E-02								642
325	374.37010E-02	325	381.50570E-02	325	382.11020E-01	325	383.18280E-03								643
325	384.38410E-01	325	385.61440E-02	325	386.56580E-03	325	387.42650E-03								644
325	394.76620E-03	325	1021.11770E-02	325	7002.11230E-01	325	7013.60850E-02								645
325	7015.51940E-03	325	7016.19710E-02	325	7017.25010E-02	325	7018.13270E-02								646
325	7313.17230E-02	325	7359.88920E-03	326	327.26970E-01	326	328.21830E-01								647
326	336.38940E-02	326	338.12900E-01	326	339.14270E-01	326	347.14100E-02								648
326	349.21000E-02	326	358.93080E-02	326	359.52890E-02	326	371.32680E-02								649
326	372.25090E-02	326	373.29020E-01	326	374.35740E-02	326	381.90190E-02								650
326	382.87630E-02	326	394.11920E-02	326	1021.14200E-02	326	7002.15650E-02								651
326	7016.24180E-02	326	7017.25570E-01	326	7018.17500E-02	326	7313.16350E-02								652
327	328.41690E-02	327	336.12540E-01	327	337.12890E-01	327	348.20940E-02								653
327	358.93440E-02	327	359.53450E-02	327	371.22850E-01	327	372.22490E-02								654
327	373.50280E-02	327	374.34720E-02	327	381.49380E-02	327	382.18440E-01								655
327	394.11390E-02	327	1021.13520E-02	327	2001.14010E-03	327	2001.11620E 00								656
327	2005.25400E-01	327	9001.34040E-04	327	9001.10940E-03	327	9001.23850E-02								657
328	335.21420E-01	328	336.87660E-01	328	337.13180E-01	328	339.26860E-01								658
328	347.21940E-01	328	348.29400E-02	328	350.69110E-02	328	357.18550E-01								659
328	358.44340E-01	328	359.51140E-02	328	360.11470E-02	328	371.22360E-02								660
328	372.25480E-02	328	373.71590E-02	328	374.79720E-02	328	381.61250E-02								661
328	382.92240E-02	328	383.16550E-02	328	384.43070E-02	328	385.63610E-02								662
328	386.81670E-03	328	387.51030E-03	328	394.78380E-03	328	1021.12480E-02								663
328	2001.30260E 00	328	2002.26580E 00	328	2005.74600E-01	328	2006.65500E-01								664
329	334.17390E-01	329	335.11710E 00	329	336.15190E-01	329	340.17710E-01								665
329	345.43370E-02	329	346.23940E-01	329	356.13090E-01	329	357.63890E-01								666
329	387.21030E-03	329	2002.13880E 00	329	2003.51380E 00	329	2006.20300E-01								667
330	333.10880E-01	330	334.86070E-01	330	335.17370E-01	330	341.13940E-01								668
330	345.15980E-01	330	356.94460E-01	330	357.13280E-01	330	389.59310E-03								669
330	391.29710E-02	330	392.27590E-02	330	2003.14000E 00	330	2004.31000E 00								670
330	2008.52000E-02	331	332.15110E-01	331	333.23490E-01	331	334.12610E-01								671
331	343.29110E-02	331	344.43550E-02	331	355.15060E-01	331	356.99900E-02								672
331	389.36250E-03	331	390.13990E-01	331	392.31110E-02	331	2004.26320E-03								673
331	2004.20730E 00	331	9004.95330E-04	331	9004.62980E-03	331	9002.49520E-04								674
331	9003.23350E-03	331	9003.10280E-03	331	9003.11080E-02	332	333.38450E-01								675

B_{N-M} - RADIATION EXCHANGE FACTORS - FT^2

1		2		3		4		5		6		7		8	
123456789	0	123456789	0	123456789	0	123456789	0	123456789	0	123456789	0	123456789	0	123456789	0
332	342.39760E-01	332	344.87300E-02	332	353.94570E-02	332	354.12740E 00								676
332	355.52480E-01	332	356.10950E-01	332	390.27300E-01	332	391.59170E-02								677
332	392.59980E-02	332	7054.13690E 00	333	341.18890E-01	333	342.33490E-01								678
333	343.13290E-01	333	344.24440E-02	333	352.65450E-02	333	353.13030E-01								679
333	355.42530E-01	333	356.15920E-01	333	389.36840E-03	333	390.11020E-01								680
333	391.17620E-01	333	392.59940E-02	333	7005.42220E-02	333	7010.98810E-02								681
333	7354.18220E-01	333	7354.44250E-03	333	7354.29490E-02	333	7354.29970E-02								682
334	340.28050E-01	334	341.17050E 00	334	342.19410E-01	334	343.34350E-02								683
334	345.71400E-02	334	345.85910E-02	334	351.93080E-02	334	352.54090E-01								684
334	353.73720E-02	334	355.17380E-01	334	356.14500E 00	334	357.18580E-01								685
334	389.73480E-03	334	391.92710E-02	334	392.69080E-02	334	7004.92480E-02								686
334	7010.17900E-02	334	7011.27890E-01	334	7354.27450E-03	334	7354.40810E-03								687
334	7354.54950E-03	335	339.28050E-01	335	340.22470E 00	335	341.28390E-01								688
335	346.12420E-01	335	346.88870E-02	335	350.84040E-02	335	351.79340E-01								689
335	352.99200E-02	335	356.17240E-01	335	357.18370E 00	335	358.12280E-01								690
335	387.32720E-03	335	7003.71970E-02	335	7012.32150E-01	336	337.33340E-02								691
336	338.18710E-01	336	339.14590E 00	336	340.25320E-01	336	347.86030E-02								692
336	347.61710E-02	336	348.11060E-02	336	349.66600E-02	336	350.90580E-01								693
336	351.10480E-01	336	357.20690E-01	336	358.11280E 00	336	359.13960E-01								694
336	360.21000E-02	336	371.29260E-02	336	372.78170E-02	336	373.22810E-02								695
336	374.64370E-02	336	381.59160E-02	336	382.11900E-01	336	383.19080E-03								696
336	384.85900E-01	336	385.43900E-01	336	386.29330E-02	336	387.85490E-03								697
336	388.26070E-02	336	394.43130E-03	336	1021.13570E-02	336	7002.48930E-02								698
336	7013.23360E-01	336	7015.10640E-02	336	7016.30200E-02	336	7017.17150E-02								699
336	7018.88750E-03	336	7313.11910E-02	336	7359.17640E-02	337	338.21290E-01								700
337	339.20530E-01	337	349.64550E-02	337	350.78660E-02	337	358.11300E-01								701
337	359.16660E-01	337	360.22880E-02	337	371.14690E-02	337	372.45490E-02								702
337	373.28580E-02	337	374.35690E-01	337	381.93660E-02	337	382.89910E-02								703
337	386.64950E-03	337	1021.14760E-02	337	7013.18890E-02	337	7015.17720E-02								704
337	7016.24080E-01	337	7017.25490E-02	337	7359.25760E-02	338	339.40700E-02								705
338	347.81040E-02	338	348.65000E-02	338	358.13120E-01	338	359.16840E-01								706
338	360.23140E-02	338	371.17030E-02	338	372.29850E-01	338	373.21990E-02								707
338	374.66000E-02	338	381.51170E-02	338	382.19140E-01	338	386.65950E-03								708
338	1021.14140E-02	338	2005.12460E-03	338	2005.11800E 00	338	9001.13580E-02								709
338	9001.24670E-04	339	346.11220E-01	339	347.54860E-01	339	348.70670E-02								710
339	350.11460E-01	339	357.22350E-01	339	358.12230E 00	339	359.14660E-01								711
339	360.22380E-02	339	371.15600E-02	339	372.43510E-02	339	373.50600E-02								712
339	374.12140E-01	339	381.71020E-02	339	382.11200E-01	339	383.22400E-02								713
339	384.54210E-02	339	385.11580E-01	339	386.31000E-02	339	387.10360E-02								714
339	388.28320E-02	339	394.59060E-03	339	1021.14770E-02	339	2005.34790E 00								715
339	2006.30560E 00	340	345.93590E-02	340	346.78450E-01	340	347.83950E-02								716
340	351.12280E-01	340	356.17040E-01	340	357.18160E 00	340	358.12150E-01								717
340	385.23650E-02	340	387.42390E-03	340	2003.13360E 00	340	2006.16280E 00								718
340	2007.40390E 00	341	343.44380E-02	341	344.71940E-02	341	345.53770E-01								719
341	346.93100E-02	341	352.86510E-02	341	355.17430E-01	341	356.14510E 00								720
341	357.18580E-01	341	389.73550E-03	341	391.66810E-02	341	392.90750E-02								721
341	2003.81200E-01	341	2004.11670E 00	341	2007.59300E-01	341	2008.44720E 00								722
342	343.13540E-01	342	344.11950E-01	342	345.66720E-02	342	355.43440E-01								723
342	356.16270E-01	342	389.65750E-03	342	390.10950E-01	342	391.58800E-02								724
342	392.16120E-01	342	2004.17800E-01	342	2008.30890E-03	342	2008.14420E 00								725
342	9004.35810E-04	342	9004.43490E-03	342	9003.12230E-03	342	9003.86000E-04								726
342	9003.97500E-03	343	344.11400E-01	343	353.12520E-01	343	354.27710E-01								727

B_{N-M} - RADIATION EXCHANGE FACTORS - FT^2

1		2		3		4		5		6		7		8	
343	355.36230E-01	343	390.58100E-02	343	391.27290E-02	343	392.27540E-02								728
343	7354.99740E-01	344	352.40610E-02	344	353.96380E-02	344	355.43560E-01								729
344	356.45070E-02	344	391.47670E-02	344	7005.94060E-03	344	7010.27280E-01								730
344	7354.65260E-02	344	7354.19380E-02	345	351.45960E-02	345	352.41420E-01								731
345	353.40090E-02	345	356.11420E 00	345	391.27050E-02	345	392.22940E-02								732
345	7004.20810E-02	345	7011.66850E-01	346	350.51840E-02	346	351.51770E-01								733
346	352.46220E-02	346	357.15910E 00	346	7012.88820E-01	347	349.46550E-02								734
347	350.49480E-01	347	351.52440E-02	347	358.14500E 00	347	359.67200E-02								735
347	360.14160E-02	347	372.58680E-02	347	374.30040E-02	347	381.23710E-02								736
347	382.52160E-02	347	385.49700E-02	347	386.24360E-02	347	388.94580E-02								737
347	1021.55970E-03	347	7013.78860E-01	347	7015.74820E-03	347	7016.96420E-03								738
347	7359.14410E-02	348	349.45870E-02	348	350.45820E-02	348	358.58520E-02								739
348	359.23700E-01	348	360.30880E-02	348	374.10140E-01	348	381.28080E-02								740
348	382.26950E-02	348	386.43300E-03	348	1021.43350E-03	348	7013.14900E-02								741
348	7015.88230E-02	348	7016.10390E-02	348	7359.13970E-01	349	358.58820E-02								742
349	359.23780E-01	349	360.30970E-02	349	372.78910E-02	349	374.24970E-02								743
349	382.58680E-02	349	386.43640E-03	349	1021.41500E-03	349	2005.10220E-03								744
349	2005.24400E-01	349	9001.34670E-03	349	9001.64130E-04	350	358.14330E 00								745
350	359.66790E-02	350	360.13990E-02	350	374.52330E-02	350	381.27490E-02								746
350	382.42190E-02	350	383.42390E-03	350	385.31130E-02	350	386.24540E-02								747
350	388.93400E-02	350	1021.56270E-03	350	2005.25730E-03	350	2005.86700E-01								748
350	2006.76100E-01	350	2006.22600E-03	351	357.15910E 00	351	2006.11940E-03								749
351	2006.36100E-01	351	2007.13920E 00	351	2007.65560E-03	352	353.33150E-03								750
352	356.11490E 00	352	392.27290E-02	352	2007.25900E-01	352	2008.12590E 00								751
352	2008.56900E-03	352	9003.51030E-03	352	9003.18530E-03	353	355.43110E-01								752
353	356.35630E-02	353	392.51940E-02	353	2008.57000E-01	353	2008.31580E-03								753
353	3354.40720E-04	353	9003.54370E-04	353	9003.11850E-03	353	9003.56090E-03								754
354	7354.11380E 01	355	390.86690E-02	355	391.15330E-01	355	392.15490E-01								755
355	399.49550E-03	355	2309.56120E-03	355	3355.12470E-02	356	389.55850E-03								756
356	391.99830E-02	356	392.10010E-01	356	399.18310E-02	356	3356.58160E-01								757
357	371.13290E-02	357	385.24820E-02	357	388.38630E-02	357	394.25290E-03								758
357	2010.11190E 01	358	360.10250E-02	358	371.42320E-02	358	372.10240E-01								759
358	373.60840E-02	358	374.13810E-01	358	381.88470E-02	358	382.16470E-01								760
358	383.60640E-03	358	384.46230E-02	358	385.13430E-01	358	386.98150E-02								761
358	388.10130E 00	358	394.64000E-03	358	1021.18990E-02	358	2009.96020E 00								762
359	360.72130E-02	359	372.10750E-01	359	374.15030E-01	359	381.63900E-02								763
359	382.11810E-01	359	386.98470E-03	359	1021.13760E-02	359	7359.22480E 00								764
360	365.82150E-04	360	374.10250E-02	360	382.81160E-03	360	3359.19510E-03								765
361	362.45690E-02	361	363.90220E-02	361	364.45690E-02	361	365.90220E-02								766
361	375.90220E-02	361	376.90220E-02	361	377.23740E 00	361	397.81480E-02								767
361	5381.22840E-03	361	5382.22840E-03	361	9001.22140E-02	362	363.27420E-01								768
362	364.91550E-02	362	365.27420E-01	362	373.73170E-03	362	375.30530E-01								769
362	376.30530E-01	362	377.53330E 00	362	396.98140E-03	362	396.48810E-02								770
362	1020.24840E-01	362	1021.82660E-02	362	5381.10530E-01	362	5382.10530E-01								771
362	6015.15650E-02	362	6016.37890E-02	362	6017.22200E-02	363	364.27420E-01								772
363	375.20840E 00	363	397.56740E-03	363	397.66800E-02	363	5381.44890E-02								773
363	5382.44890E-02	363	9001.38420E-02	363	9005.94750E-03	364	365.27420E-01								774
364	371.54430E-03	364	375.30530E-01	364	376.30530E-01	364	377.53330E 00								775
364	395.45330E-02	364	395.86190E-03	364	1020.24840E-01	364	1021.82660E-02								776
364	5381.10530E-01	364	5382.10530E-01	364	9001.42010E-01	365	370.38670E-02								777
365	376.20840E 00	365	5359.48400E-02	365	5381.44890E-02	365	5382.44890E-02								778
370	393.85050E-03	370	3359.78630E-03	370	9001.42010E-03	371	395.11790E-03								779

B_{N-M} - RADIATION EXCHANGE FACTORS - FT^2

1		2		3		4		5		6		7		8	
123456789	0	123456789	0	123456789	0	123456789	0	123456789	0	123456789	0	123456789	0	123456789	0
371	9001.13360E-02	373	9005.19300E-03	374	386.51420E-03	375	376.27240E-03								780
375	377.24830E 00	375	1020.10360E-01	375	1021.34670E-02	375	5381.68440E-02								781
375	5382.68440E-02	376	377.24830E 00	376	1020.10360E-01	376	1021.34670E-02								782
376	5381.68440E-02	376	5382.68440E-02	377	1020.23740E 00	381	5381.77700E-01								783
382	386.43330E-03	382	5382.14200E 00	385	387.13190E-03	389	391.16870E-03								784
389	392.17180E-03	391	392.15250E-01	393	3359.38040E-02	393	9001.15700E-02								785
395	397.15750E-02	395	9001.15550E-02	395	9001.16230E-01	395	9005.15790E-02								786
396	397.15750E-02	396	9005.18610E-02	397	400.10060E-02	397	9001.43310E-01								787
397	9005.50600E-01	398	9001.91600E-02	399	2309.81430E-03	399	5355.31480E-02								788
399	3356.76590E-02	399	6011.50140E-02	399	9003.58640E-02	400	3400.11860E-01								789
400	9001.47340E-02	400	9005.10220E-01	1020	1021.55560E-01	1020	5381.55560E-01								790
1020	5382.55560E-01	1025	9001.18750E-01	1025	9005.10800E-01	2001	2301.21000E-02								791
2001	9001.81930E-03	2001	9001.57760E-01	2001	9001.34100E-03	2001	9001.38220E-03								792
2001	9002.32210E-02	2001	9002.15120E-03	2002	9001.31560E-04	2002	9001.24640E-03								793
2002	9001.12180E-01	2002	9002.10920E-03	2002	9002.29560E-01	2002	9002.27570E-03								794
2002	9004.47980E-04	2003	2303.21000E-02	2003	2304.70000E-03	2003	9001.26890E-04								795
2003	9002.63520E-01	2003	9002.62170E-03	2003	9002.11920E-04	2003	9002.37290E-03								796
2003	9003.46660E-04	2003	9004.10810E-03	2004	2305.21000E-02	2004	2306.40000E-03								797
2004	3354.87390E-04	2004	3354.11290E-04	2004	9002.80700E-04	2004	9002.84300E-03								798
2004	9002.38450E-01	2004	9003.32870E-04	2004	9003.10540E-03	2004	9003.31820E-01								799
2004	9003.29860E-03	2004	9003.38050E-03	2005	2302.21000E-02	2005	9001.56690E-04								800
2005	9001.21880E-01	2005	9001.19920E-03	2005	9002.34120E-02	2006	9001.80500E-02								801
2006	9002.12270E-01	2007	2304.14000E-02	2007	9002.20880E-01	2008	2306.17000E-02								802
2008	3354.10070E-03	2008	9002.22790E-01	2008	9003.29330E-03	2008	9003.19660E-01								803
2008	9003.91420E-04	2008	9003.17960E-03	2009	2307.21000E-02	2009	3359.64310E-02								804
2010	2308.21000E-02	2301	9001.18720E-01	2302	9001.88060E-02	2303	9002.15210E-01								805
2304	9002.85340E-02	2305	9002.11240E-02	2305	9003.15150E-01	2306	9002.10950E-02								806
2306	9003.12470E-01	2309	3354.22840E-02	2309	3355.16380E-02	2309	6010.86650E-03								807
2309	9003.12350E-02	3310	9002.62130E-01	3311	9002.31450E-01	3312	5313.32440E-01								808
3312	9001.36880E-01	3312	9006.23210E 00	3313	5313.51250E-01	3313	9001.55510E-02								809
3313	9006.39640E-01	3354	7354.51030E-01	3354	9003.12730E 00	3355	3356.15690E-02								810
3355	9003.16630E-02	3359	6013.87320E-02	3359	7359.20910E-01	3400	5313.58890E-01								811
3400	6018.38690E-02	3400	9001.74170E-01	3400	9005.25100E-01	5313	6001.10830E-01								812
5313	6002.61160E-02	5313	7313.23660E-01	5313	9001.10280E 00	5313	9005.29460E-01								813
5313	9006.77240E-01	6001	7313.10710E-02	6001	9006.10070E-01	6002	7002.79560E-02								814
6002	9006.59390E-01	6003	7003.75970E-02	6004	7004.73660E-02	6004	9002.58460E-02								815
6005	7005.41250E-02	6010	7010.31240E-02	6011	7011.73010E-02	6012	7012.92710E-02								816
6013	7013.79560E-02	6015	7015.10820E-02	6016	7016.24710E-02	6017	7017.24600E-02								817
6017	9001.22390E-02	6017	9005.25090E-02	6018	7018.20550E-02	6018	9001.53180E-02								818
6018	9005.39730E-02	7002	7012.27850E-02	7002	7013.62800E-02	7002	7015.37880E-03								819
7002	7016.14180E-02	7002	7017.19600E-02	7002	7018.11510E-02	7002	7359.94130E-03								820
7003	7011.21110E-02	7003	7012.84820E-02	7003	7013.22730E-02	7004	7010.18410E-02								821
7004	7011.89800E-02	7004	7012.29090E-02	7004	7354.34050E-03	7004	7354.51480E-03								822
7004	7354.70150E-03	7005	7010.34650E-02	7005	7011.26460E-02	7005	7354.51620E-02								823
7005	7354.15990E-02	7005	7354.47260E-02	7005	7354.44640E-03	7010	7354.23950E-02								824
7010	7354.15660E-03	7010	7354.48140E-02	7010	7354.80340E-03	7011	7354.16910E-03								825
7011	7354.14390E-03	7011	7354.59970E-03	7011	7354.59180E-03	7013	7015.76380E-03								826
7013	7016.21040E-02	7013	7017.12480E-02	7013	7313.13680E-02	7015	7359.65130E-02								827
7016	7359.13840E-02	7017	7313.14860E-02	7018	7313.93540E-02	9001	9005.17660E 00								828
9001	9006.87470E-01	9002	9003.35300E 00	9002	9004.36660E 00										829

9999999999 C_{NM} - CONDUCTANCE - BTU/HR-°F 830

												831
17	18.14600E 01	17	21.39180E 01	17	25.39500E 01	17	613.60800E-01					

C_{NM} CONDUCTANCE - BTU/HR °F

1		2		3		4		5		6		7		8	
18	19.14600E 01	18	22.39180E 01	18	26.39500E 01	19	20.14600E 01								832
19	23.39180E 01	19	27.39500E 01	20	24.39180E 01	20	28.39500E 01								833
20	654.33800E-01	21	22.14800E 01	21	659.13680E 00	22	23.14800E 01								834
22	125.28250E 00	23	24.14800E 01	23	125.28250E 00	25	26.14600E 01								835
25	29.39180E 01	25	9005.24600E 01	25	9006.40000E 00	26	27.14800E 01								836
26	30.39180E 01	27	28.14600E 01	27	31.39180E 01	28	32.39180E 01								837
29	30.14800E 01	29	9001.10000E 00	30	31.14600E 01	30	127.28250E 00								838
30	9004.20000E 00	31	32.14800E 01	31	127.28250E 00	31	9002.12000E 00								839
31	9004.20000E 00	125	145.21900E 01	126	153.21900E 01	127	146.52700E 00								840
132	154.52700E 00	145	146.15200E 01	153	154.15200E 01	302	303.32430E 01								841
302	313.17410E 01	302	314.32430E 01	302	400.28800E-01	303	304.89690E 00								842
303	313.13230E 01	303	373.11870E 01	303	381.21000E 00	303	394.77920E 00								843
304	305.54170E 00	304	313.10180E 01	304	326.30680E 01	305	306.17390E 00								844
305	312.25590E 01	305	325.30080E 01	306	307.63000E-01	306	311.30530E 01								845
306	324.39260E 01	307	308.48800E-01	307	510.35500E 01	307	323.51210E 01								846
308	309.19150E 01	308	320.90700E 00	308	322.34380E 01	309	310.57760E 00								847
309	319.20550E 01	309	320.10200E 01	309	389.28300E-02	309	390.28300E-02								848
310	311.29130E 00	310	318.55900E 01	311	312.30250E 00	311	317.30330E 01								849
312	313.46250E 00	312	316.22880E 01	313	314.13230E 01	313	315.10180E 01								850
313	613.60800E-01	314	315.89690E 00	314	371.10530E 01	314	382.21100E 00								851
314	394.77920E 00	315	316.54170E 00	315	327.17530E 01	315	2001.30700E-02								852
316	317.33290E 00	316	328.40000E 01	316	2001.46000E-02	316	2002.46000E-02								853
317	318.21880E 00	317	329.52350E 01	317	2002.30700E-02	317	2003.92000E-02								854
318	319.11960E 00	316	330.69080E 01	318	2003.15400E-02	318	2004.46100E-02								855
319	320.90700E 00	319	331.45350E 01	319	2004.30700E-02	320	321.78590E 01								856
320	354.46700E 00	321	322.47550E 00	321	331.47550E 00	321	332.60540E 01								857
321	354.41670E 01	322	323.24930E 00	322	333.16890E 01	323	324.21290E 00								858
323	334.30080E 01	324	325.28670E 00	324	335.51290E 01	325	326.47000E 00								859
325	336.28060E 01	326	337.17530E 01	326	373.13480E 01	327	328.62460E 00								860
327	338.39250E 01	327	371.13480E 01	327	2001.42970E-01	328	329.37440E 00								861
328	339.37310E 01	328	2001.53700E-02	328	2002.53700E-02	328	2005.23000E-02								862
328	2006.23000E-02	329	330.45700E 00	329	340.41790E 01	329	2002.61400E-02								863
329	2003.10750E-01	330	371.38400E 00	330	341.40570E 01	330	2003.46100E-02								864
330	2004.76800E-02	331	342.22740E 01	331	2004.30700E-02	332	333.44030E 00								865
332	342.48460E 00	332	343.78590E 01	332	354.36110E 01	332	389.28300E-02								866
332	390.28300E-02	333	334.36540E 00	333	344.19290E 01	334	335.28440E 00								867
334	345.44200E 01	335	336.21530E 00	335	346.47790E 01	336	337.36740E 00								868
336	347.40660E 01	336	383.56800E-02	336	384.56800E-02	336	385.29910E 00								869
337	348.50670E 01	337	374.16600E 01	338	339.51030E 00	338	349.80080E 01								870
338	372.16600E 01	338	2005.30700E-02	339	340.29900E 00	339	350.54060E 01								871
339	2005.30700E-02	339	2006.30700E-02	340	341.37350E 00	340	351.63960E 01								872
340	2003.46100E-02	340	2006.30700E-02	340	2007.61400E-02	341	342.48580E 00								873
341	352.58910E 01	341	2003.15400E-02	341	2004.15400E-02	341	2007.15400E-02								874
341	2008.12280E-01	342	353.25900E 01	342	2004.84400E-01	343	344.23670E 00								875
343	353.25510E 00	343	354.73400E 00	343	355.12130E 01	344	345.10960E 00								876
344	355.65490E 01	345	346.72900E-01	345	356.35020E 01	346	347.70400E-01								877
346	357.37740E 01	347	348.73910E 00	347	358.51950E 01	348	359.96860E 00								878
348	360.19750E 01	349	350.42950E 00	349	359.86790E 00	349	360.10450E 01								879
349	2005.30700E-02	350	351.17970E 00	350	358.50650E 01	350	2005.46000E-02								880
350	2006.46000E-02	351	352.17510E 00	351	357.35140E 01	351	2006.30700E-02								881
351	2007.92000E-02	352	353.26290E 00	352	356.31680E 01	352	2007.30700E-02								882
352	2008.92100E-02	353	355.14570E 01	353	2008.30700E-02	354	654.33800E-01								883

C_{NM} CONDUCTANCE - BTU/HR °F

```
        1         2         3         4         5         6         7         8
12345678901234567890123456789012345678901234567890123456789012345678901234567890

  355  356.41270E 00  355  389.28300E-02  355  390.28300E-02  355  391.11390E 00
  355  392.11390E 00  355  399.18100E 00  355 2309.56300E 00  356  357.25500E 00
  356  399.56300E 00  357  358.27860E 00  357 2010.49110E-01  358  359.50620E 00
  358  387.28780E-01  358  388.28800E-01  358 2009.49110E-01  359  360.22410E 01
  359  386.24000E 00  359  659.13680E 00  360  572.69880E 00  360  374.69800E 00
  360  381.26900E 00  360  382.46100E 00  361  362.10850E 01  361  363.23470E 00
  361  364.10850E 01  361  365.23470E 00  361  375.29400E 00  361  376.29400E 00
  362  363.53000E 00  362  365.53000E 00  362  375.82850E 00  362  376.82850E 00
  362  396.44200E-01  362  396.44200E-01  362  397.48300E 00  362 1020.47780E 00
  362 5381.12030E 01  363  364.53000E 00  363  375.81570E 00  363 5381.10530E 00
  363 5382.11680E 00  364  365.53000E 00  364  375.82850E 00  364  376.82850E 00
  364  395.44200E-01  364  395.44200E-01  364  397.48300E 00  364 1020.51860E 00
  364 5382.11160E 01  365  370.99220E-01  365  376.81570E 00  365 5381.10530E 00
  365 5382.11680E 00  370  593.59720E-01  371  372.96060E 00  371  382.81300E 00
  371  397.12300E 00  372  382.74600E 00  372  395.89280E-02  373  374.11290E 01
  373  381.46100E 00  373  397.12300E 00  374  381.41900E 00  374  396.89280E-02
  375  378.48000E 00  375 1020.12690E 00  375 5381.96000E-01  375 5382.19800E 00
  376  379.48000E 00  376 1020.12690E 00  376 5381.96000E-01  376 5382.19800E 00
  380 5382.48000E 00  381 5381.27400E 00  382 5382.35200E 00  383  384.22680E 01
  387  388.25200E 01  389  390.45000E 01  395  396.26100E 00  395  398.12000E 00
  396  398.12000E 00 1020 5381.10720E 01 1020 5382.99480E 00 2001 2002.95800E-01
 2001 2005.22920E 00 2002 2006.22080E 00 2003 2007.40660E 00 2004 2008.53970E 00
 2005 2006.95800E-01 5381 5382.21970E 00
9999999999                    TIME TABLE - HRS
   61
    0.0       0.025     0.050     0.075     0.100     0.125     0.150     0.175
    0.200     0.225     0.250     0.275     0.300     0.325     0.350     0.375
    0.400     0.425     0.450     0.475     0.500     0.525     0.550     0.575
    0.600     0.625     0.650     0.675     0.700     0.725     0.750     0.775
    0.800     0.825     0.850     0.875     0.900     0.925     0.950     0.975
    1.000     1.025     1.050     1.075     1.100     1.125     1.150     1.175
    1.200     1.225     1.250     1.275     1.300     1.325     1.350     1.375
    1.400     1.425     1.450     1.475     1.500
9999999999                  HEAT FLUX TABLE - BTU/HR
  302   1.0
  303   1.0
```

HEAT FLUX TABLES - BTU/HR

```
        1         2         3         4         5         6         7         8
123456789012345678901234567890123456789012345678901234567890123456789012345678901
  314   1.0                                                                       936
                                                                                  937
                                                                                  938
                                                                                  939
                                                                                  940
                                                                                  941
                                                                                  942
                                                                                  943
                                                                                  944
  383   1.0                                                                       945
                                                                                  946
                                                                                  947
                                                                                  948
                                                                                  949
                                                                                  950
                                                                                  951
                                                                                  952
                                                                                  953
  387   1.0                                                                       954
                                                                                  955
                                                                                  956
                                                                                  957
                                                                                  958
                                                                                  959
                                                                                  960
                                                                                  961
                                                                                  962
  389   1.0                                                                       963
                                                                                  964
                                                                                  965
                                                                                  966
                                                                                  967
                                                                                  968
                                                                                  969
                                                                                  970
                                                                                  971
  394   1.0                                                                       972
                                                                                  973
                                                                                  974
                                                                                  975
                                                                                  976
                                                                                  977
                                                                                  978
                                                                                  979
                                                                                  980
  400   1.0                                                                       981
                                                                                  982
                                                                                  983
                                                                                  984
                                                                                  985
                                                                                  986
                                                                                  987
```

HEAT FLUX TABLES - BTU/HR

```
         1         2         3         4         5         6         7         8
123456789012345678901234567890123456789012345678901234567890123456789012345678901234567890

                                                                                        988
                                                                                        989
 399     1.0                                                                            990
 10.094    10.094    10.094    10.094    10.094    10.094    10.094    10.094           991
 10.094    10.094    10.094    10.094    10.094    10.094    10.094    10.094           992
 10.094    10.094    10.094    10.094    10.094    10.094    10.094    10.094           993
 10.094    10.094    10.094    10.094    10.094    10.094    10.094    10.094           994
 10.094    10.094    10.094    10.094    10.094    10.094    10.094    10.094           995
 10.094    10.094    10.094    10.094    10.094    10.094    10.094    10.094           996
 10.094    10.094    10.094    10.094    10.094    10.094    10.094    10.094           997
 10.094    10.094    10.094    10.094    10.094                                        998
2301     1.0                                                                            999
  0.40068   0.40068   0.40068   0.40068   0.40068   0.40068   0.40068   0.40068         1000
  0.40068   0.40068   0.40068   0.40068   0.40068   0.40068   0.40068   0.40068         1001
  0.40068   0.40068   0.40068   0.40068   0.40068   0.40068   0.40068   0.40068         1002
  0.40068   0.40068   0.40068   0.40068   0.40068   0.40068   0.40068   0.40068         1003
  0.40068   0.40068   0.40068   0.40068   0.40068   0.40068   0.40068   0.40068         1004
  0.40068   0.40068   0.40068   0.40068   0.40068   0.40068   0.40068   0.40068         1005
  0.40068   0.40068   0.40068   0.40068   0.40068   0.40068   0.40068   0.40068         1006
  0.40068   0.40068   0.40068   0.40068   0.40068                                        1007
2302     1.0                                                                            1008
  0.40068   0.40068   0.40068   0.40068   0.40068   0.40068   0.40068   0.40068         1009
  0.40068   0.40068   0.40068   0.40068   0.40068   0.40068   0.40068   0.40068         1010
  0.40068   0.40068   0.40068   0.40068   0.40068   0.40068   0.40068   0.40068         1011
  0.40068   0.40068   0.40068   0.40068   0.40068   0.40068   0.40068   0.40068         1012
  0.40068   0.40068   0.40068   0.40068   0.40068   0.40068   0.40068   0.40068         1013
  0.40068   0.40068   0.40068   0.40068   0.40068   0.40068   0.40068   0.40068         1014
  0.40068   0.40068   0.40068   0.40068   0.40068   0.40068   0.40068   0.40068         1015
  0.40068   0.40068   0.40068   0.40068   0.40068                                        1016
2303     1.0                                                                            1017
  0.32798   0.32798   0.32798   0.32798   0.32798   0.32798   0.32798   0.32798         1018
  0.32798   0.32798   0.32798   0.32798   0.32798   0.32798   0.32798   0.32798         1019
  0.32798   0.32798   0.32798   0.32798   0.32798   0.32798   0.32798   0.32798         1020
  0.32798   0.32798   0.32798   0.32798   0.32798   0.32798   0.32798   0.32798         1021
  0.32798   0.32798   0.32798   0.32798   0.32798   0.32798   0.32798   0.32798         1022
  0.32798   0.32798   0.32798   0.32798   0.32798   0.32798   0.32798   0.32798         1023
  0.32798   0.32798   0.32798   0.32798   0.32798   0.32798   0.32798   0.32798         1024
  0.32798   0.32798   0.32798   0.32798   0.32798                                        1025
2304     1.0                                                                            1026
  0.27099   0.27099   0.27099   0.27099   0.27099   0.27099   0.27099   0.27099         1027
  0.27099   0.27099   0.27099   0.27099   0.27099   0.27099   0.27099   0.27099         1028
  0.27099   0.27099   0.27099   0.27099   0.27099   0.27099   0.27099   0.27099         1029
  0.27099   0.27099   0.27099   0.27099   0.27099   0.27099   0.27099   0.27099         1030
  0.27099   0.27099   0.27099   0.27099   0.27099   0.27099   0.27099   0.27099         1031
  0.27099   0.27099   0.27099   0.27099   0.27099   0.27099   0.27099   0.27099         1032
  0.27099   0.27099   0.27099   0.27099   0.27099   0.27099   0.27099   0.27099         1033
  0.27099   0.27099   0.27099   0.27099   0.27099                                        1034
2305     1.0                                                                            1035
  0.28020   0.28020   0.28020   0.28020   0.28020   0.28020   0.28020   0.28020         1036
  0.28020   0.28020   0.28020   0.28020   0.28020   0.28020   0.28020   0.28020         1037
  0.28020   0.28020   0.28020   0.28020   0.28020   0.28020   0.28020   0.28020         1038
  0.28020   0.28020   0.28020   0.28020   0.28020   0.28020   0.28020   0.28020         1039
```

HEAT FLUX TABLES - BTU/HR

```
        1         2         3         4         5         6         7         8
12345678901234567890123456789012345678901234567890123456789012345678901234567890
  0.28020   0.28020   0.28020   0.28020   0.28020   0.28020   0.28020   0.28020
  0.28020   0.28020   0.28020   0.28020   0.28020   0.28020   0.28020   0.28020
  0.28020   0.28020   0.28020   0.28020   0.28020   0.28020   0.28020   0.28020
  0.28020   0.28020   0.28020   0.28020   0.28020
2306    1.0
  0.27099   0.27099   0.27099   0.27099   0.27099   0.27099   0.27099   0.27099
  0.27099   0.27099   0.27099   0.27099   0.27099   0.27099   0.27099   0.27099
  0.27099   0.27099   0.27099   0.27099   0.27099   0.27099   0.27099   0.27099
  0.27099   0.27099   0.27099   0.27099   0.27099   0.27099   0.27099   0.27099
  0.27099   0.27099   0.27099   0.27099   0.27099   0.27099   0.27099   0.27099
  0.27099   0.27099   0.27099   0.27099   0.27099   0.27099   0.27099   0.27099
  0.27099   0.27099   0.27099   0.27099   0.27099   0.27099   0.27099   0.27099
  0.27099   0.27099   0.27099   0.27099   0.27099
2307    1.0
  0.29658   0.29658   0.29658   0.29658   0.29658   0.29658   0.29658   0.29658
  0.29658   0.29658   0.29658   0.29658   0.29658   0.29658   0.29658   0.29658
  0.29658   0.29658   0.29658   0.29658   0.29658   0.29658   0.29658   0.29658
  0.29658   0.29658   0.29658   0.29658   0.29658   0.29658   0.29658   0.29658
  0.29658   0.29658   0.29658   0.29658   0.29658   0.29658   0.29658   0.29658
  0.29658   0.29658   0.29658   0.29658   0.29658   0.29658   0.29658   0.29658
  0.29658   0.29658   0.29658   0.29658   0.29658   0.29658   0.29658   0.29658
  0.29658   0.29658   0.29658   0.29658   0.29658
2308    1.0
  0.30751   0.30751   0.30751   0.30751   0.30751   0.30751   0.30751   0.30751
  0.30751   0.30751   0.30751   0.30751   0.30751   0.30751   0.30751   0.30751
  0.30751   0.30751   0.30751   0.30751   0.30751   0.30751   0.30751   0.30751
  0.30751   0.30751   0.30751   0.30751   0.30751   0.30751   0.30751   0.30751
  0.30751   0.30751   0.30751   0.30751   0.30751   0.30751   0.30751   0.30751
  0.30751   0.30751   0.30751   0.30751   0.30751   0.30751   0.30751   0.30751
  0.30751   0.30751   0.30751   0.30751   0.30751   0.30751   0.30751   0.30751
  0.30751   0.30751   0.30751   0.30751   0.30751
2309    1.0
  2.04600   2.04600   2.04600   2.04600   2.04600   2.04600   2.04600   2.04600
  2.04600   2.04600   2.04600   2.04600   2.04600   2.04600   2.04600   2.04600
  2.04600   2.04600   2.04600   2.04600   2.04600   2.04600   2.04600   2.04600
  2.04600   2.04600   2.04600   2.04600   2.04600   2.04600   2.04600   2.04600
  2.04600   2.04600   2.04600   2.04600   2.04600   2.04600   2.04600   2.04600
  2.04600   2.04600   2.04600   2.04600   2.04600   2.04600   2.04600   2.04600
  2.04600   2.04600   2.04600   2.04600   2.04600   2.04600   2.04600   2.04600
  2.04600   2.04600   2.04600   2.04600   2.04600
9999999999
```

SPECIFIED TEMPERATURE TABLES - °F

```
125
49.62
126
51.30
127
49.61
128
49.61
129
49.61
131
```

```
1040
1041
1042
1043
1044
1045
1046
1047
1048
1049
1050
1051
1052
1053
1054
1055
1056
1057
1058
1059
1060
1061
1062
1063
1064
1065
1066
1067
1068
1069
1070
1071
1072
1073
1074
1075
1076
1077
1078
1079
1080
1081
1082
1083
1084
1085
1086
1087
1088
1089
1090
1091
```

SPECIFIED TEMPERATURE TABLES - °F

```
        1         2         3         4         5         6         7         8
12345678901234567890123456789012345678901234567890123456789012345678901234567890
```

```
  49.61                                                                        1092
  132                                                                          1093
  49.61                                                                        1094
  130                                                                          1095
  50.00                                                                        1096
  145                                                                          1097
  52.80                                                                        1098
  146                                                                          1099
  52.8                                                                         1100
  153                                                                          1101
  44.95                                                                        1102
  154                                                                          1103
  44.95                                                                        1104
 9005                                                                          1105
  70.00                                                                        1106
   20                                                                          1107
  62.60                                                                        1108
   24                                                                          1109
  62.6                                                                         1110
   28                                                                          1111
  62.60                                                                        1112
   32                                                                          1113
  62.60                                                                        1114
   18                                                                          1115
  59.9                                                                         1116
   19                                                                          1117
  59.9                                                                         1118
   22                                                                          1119
  59.9                                                                         1120
   23                                                                          1121
  59.9                                                                         1122
   26                                                                          1123
  59.9                                                                         1124
   27                                                                          1125
  59.9                                                                         1126
   30                                                                          1127
  59.9                                                                         1128
   31                                                                          1129
  59.9                                                                         1130
   17                                                                          1131
  60.30                                                                        1132
   21                                                                          1133
  60.30                                                                        1134
   25                                                                          1135
  60.30                                                                        1136
   29                                                                          1137
  60.30                                                                        1138
9999999999                                                                    1139
```

INITIAL TEMPERATURE TABLES °F

17	72.660	18	63.630	19	63.630	20	64.950	21	72.660	1140
22	67.630	23	63.630	24	64.950	25	72.660	26	63.630	1141
27	63.630	28	64.950	29	72.660	30	67.630	31	63.630	1142
32	64.950	55	53.273	56	53.419	57	61.119	68	69.898	1143

↑ --TEMPERATURE °F

--NODE NUMBER

INITIAL TEMPERATURE TABLES °F

1		2		3		4		5		6		7		8	
123456789	0	123456789	0	123456789	0	123456789	0	123456789	0	123456789	0	123456789	0	123456789	0	
69	69.768	70	55.542	71	66.364	72	65.400	73	64.413							1144
74	66.539	75	65.473	76	56.614	77	66.271	78	63.116							1145
79	62.871	80	58.171	81	58.817	125	50.810	126	52.440							1146
127	50.640	128	52.050	129	52.050	130	52.050	131	52.050							1147
132	52.050	139	55.130	145	66.640	146	66.640	153	55.450							1148
154	55.450	301	67.142	302	69.829	303	69.720	304	70.192							1149
305	70.211	306	69.929	307	69.567	308	70.054	309	69.960							1150
310	69.453	311	70.077	312	70.192	313	70.257	314	69.693							1151
315	70.150	316	70.457	317	69.957	318	69.460	319	69.750							1152
320	70.070	321	70.114	322	70.104	323	69.691	324	69.823							1153
325	70.070	326	69.819	327	69.501	328	70.561	329	69.994							1154
330	69.552	331	69.737	332	70.156	333	70.216	334	69.682							1155
335	69.845	336	70.023	337	69.363	338	69.158	339	70.095							1156
340	69.674	341	69.478	342	69.701	343	70.196	344	70.451							1157
345	69.665	346	69.887	347	69.818	348	69.268	349	69.036							1158
350	69.502	351	69.221	352	69.176	353	69.655	354	70.075							1159
355	70.564	356	69.624	357	69.978	358	69.701	359	69.039							1160
360	68.926	361	60.880	362	60.875	363	61.224	364	60.797							1161
365	60.767	370	58.299	371	66.722	372	68.731	373	69.005							1162
374	68.987	375	61.074	376	60.950	377	60.940	378	61.074							1163
379	60.949	380	62.082	381	67.718	382	67.744	383	80.260							1164
384	79.502	385	70.076	386	69.102	387	69.725	388	69.725							1165
389	86.589	390	86.089	391	70.298	392	70.236	393	55.447							1166
394	69.692	395	54.628	396	55.900	397	58.404	398	54.366							1167
399	70.690	400	72.219	613	71.292	654	67.633	659	70.816							1168
1020	61.549	1021	63.059	1025	60.727	2001	72.909	2002	72.811							1169
2003	70.932	2004	70.668	2005	72.562	2006	72.476	2007	70.560							1170
2008	70.892	2009	72.325	2010	70.668	2301	74.567	2302	69.259							1171
2303	71.885	2304	66.090	2305	71.273	2306	68.471	2307	61.715							1172
2308	62.164	2309	74.311	3309	64.123	3310	65.533	3311	65.324							1173
3312	66.518	3313	67.000	3354	56.810	5355	55.726	3356	54.678							1174
3359	52.883	3400	65.693	5313	66.662	5381	61.912	5382	62.084							1175
6001	67.152	6002	66.921	6003	65.479	6004	65.567	6005	64.833							1176
6010	53.986	6011	54.017	6012	53.070	6013	52.340	6015	57.935							1177
6016	58.752	6017	60.282	6018	63.055	7002	69.902	7003	69.688							1178
7004	69.555	7005	69.729	7010	69.547	7011	69.282	7012	69.347							1179
7013	69.399	7015	69.124	7016	69.387	7017	69.611	7018	69.802							1180
7313	69.902	7354	69.718	7359	68.382	9000	69.200	9001	69.260							1181
9002	69.300	9003	69.200	9004	69.200	9005	64.770	9006	69.200							1182
9999999999																1185

APPENDIX B
S082B Thermal Model

PREFACE

The purpose of this appendix is to document the thermal analytical model used in the S082B Thermal Distortion Analysis.

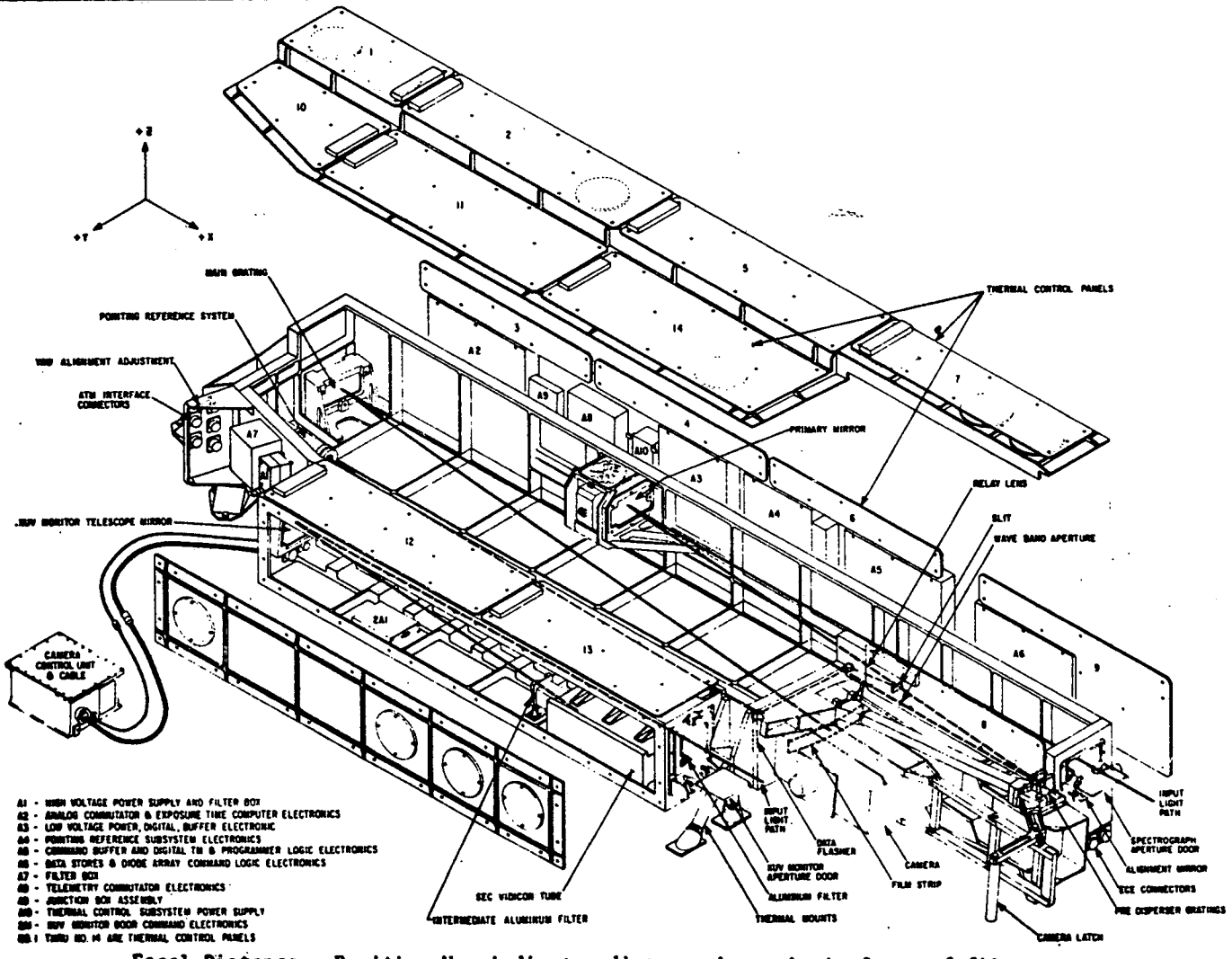

Focal Distance - Positive No. indicates distance image is in front of film.
Negative No. indicates distance image is behind film.

Vertical Movement - Positive No. indicates image movement in the +Y direction relative to the film plane.

Horizontal Movement - Positive No. indicates image movement in the +Z direction relative to the film plane.

Figure B-1. Distortion Sign Convention
S082B Instrument

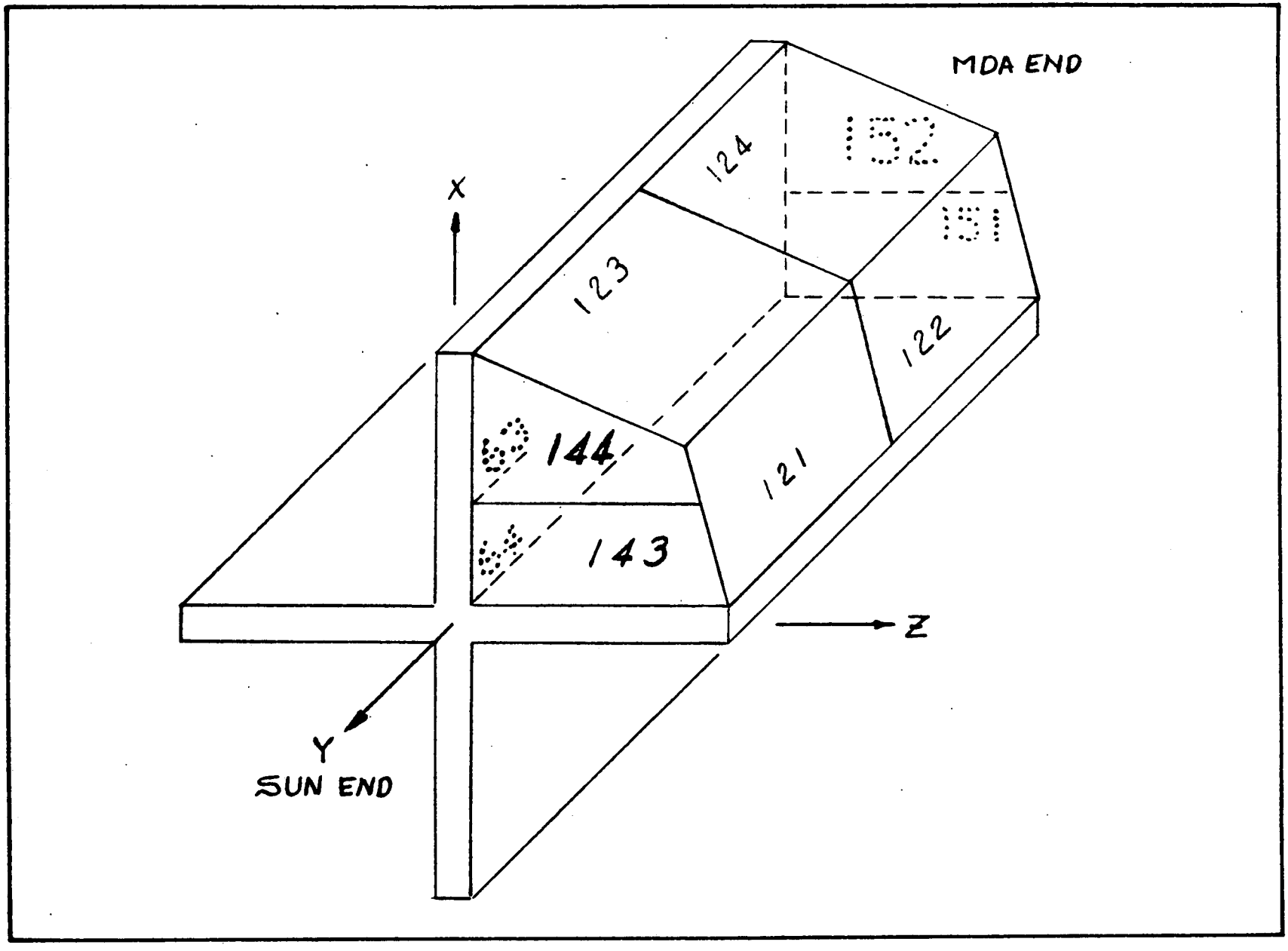

Figure B-2. ATM Canister Nodes, Quadrant III

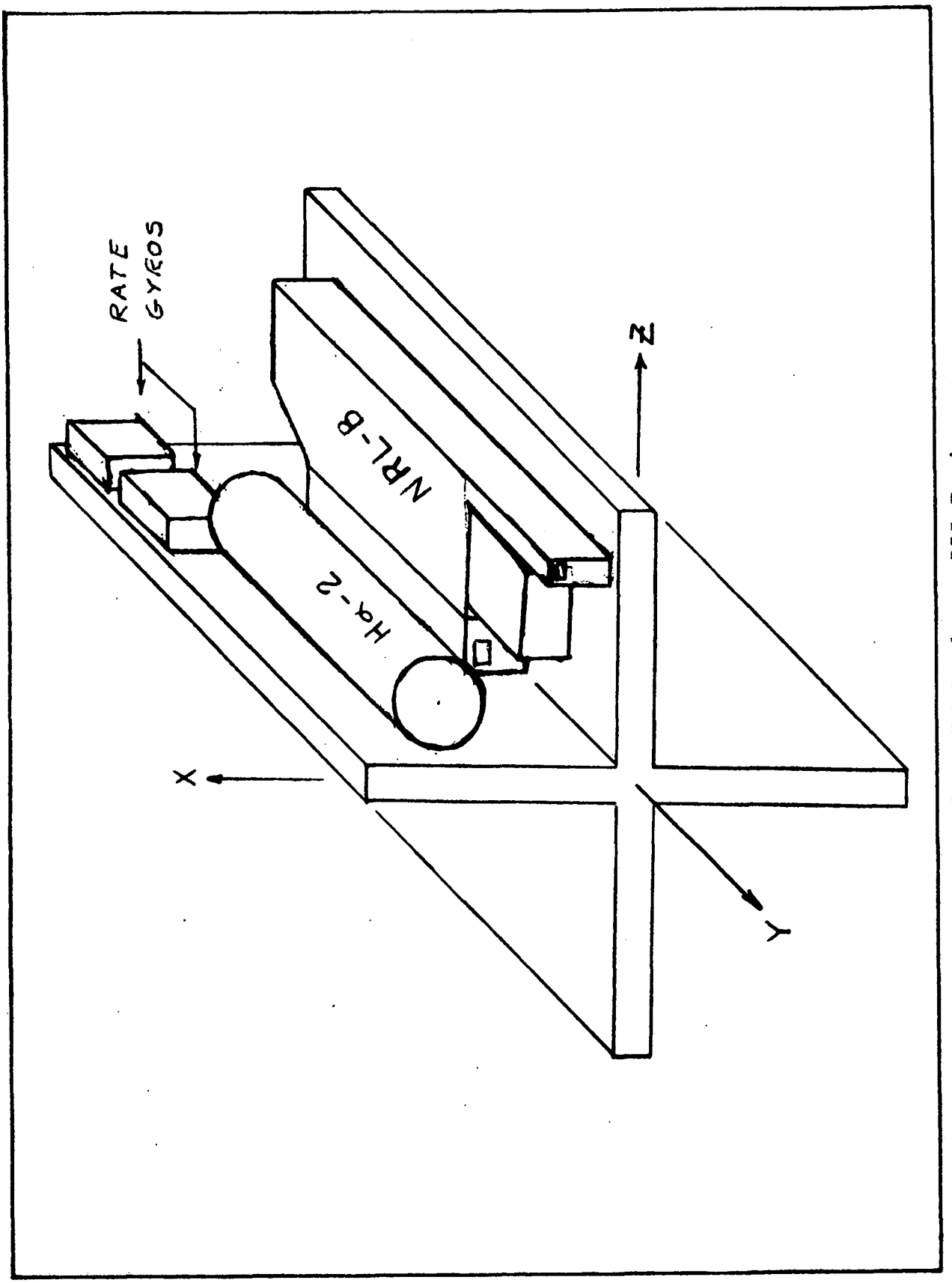

Figure B-3. ATM Quadrant III Equipment

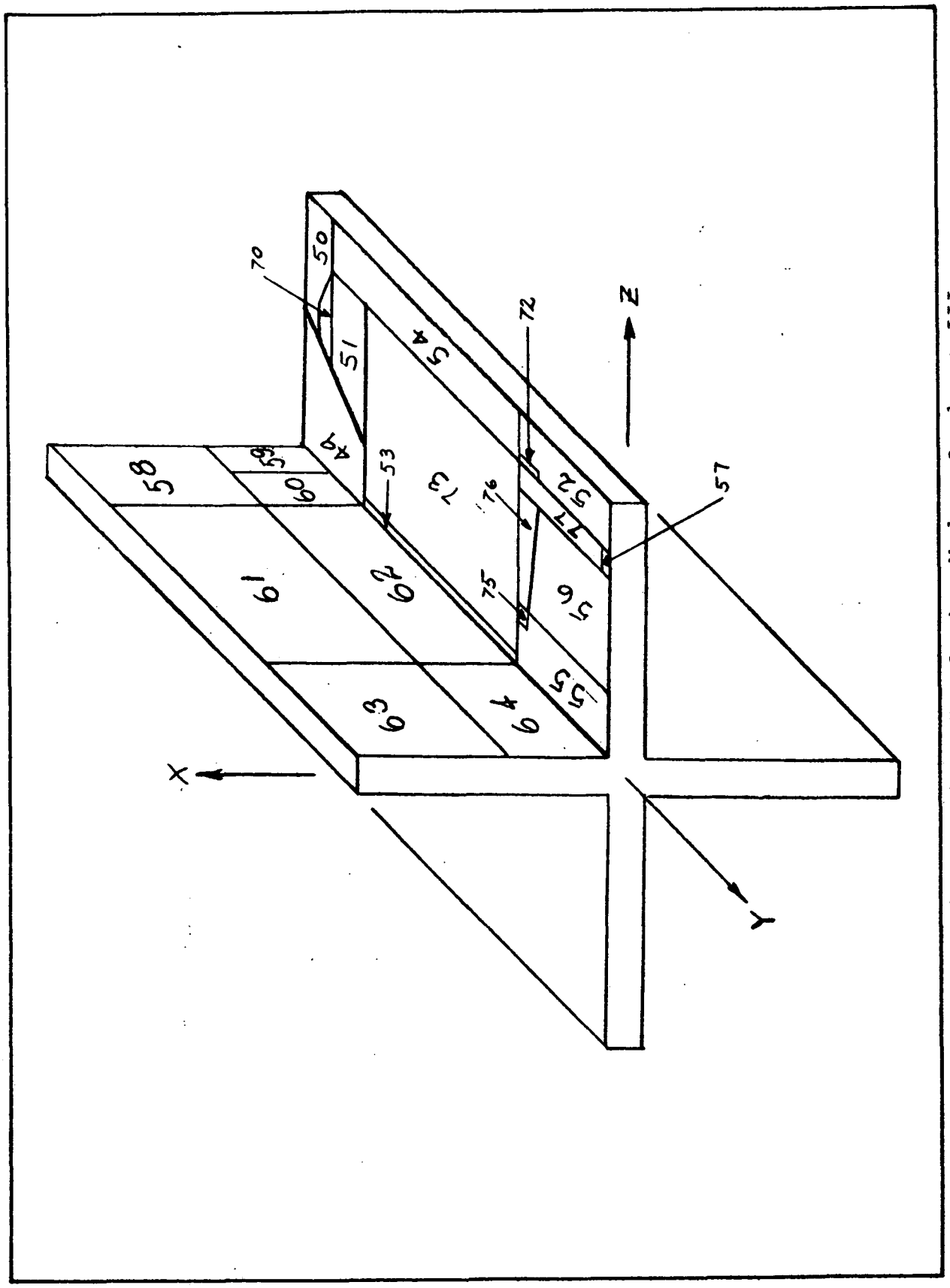

Figure B-4. ATM Spar Insulation Nodes, Quadrant III

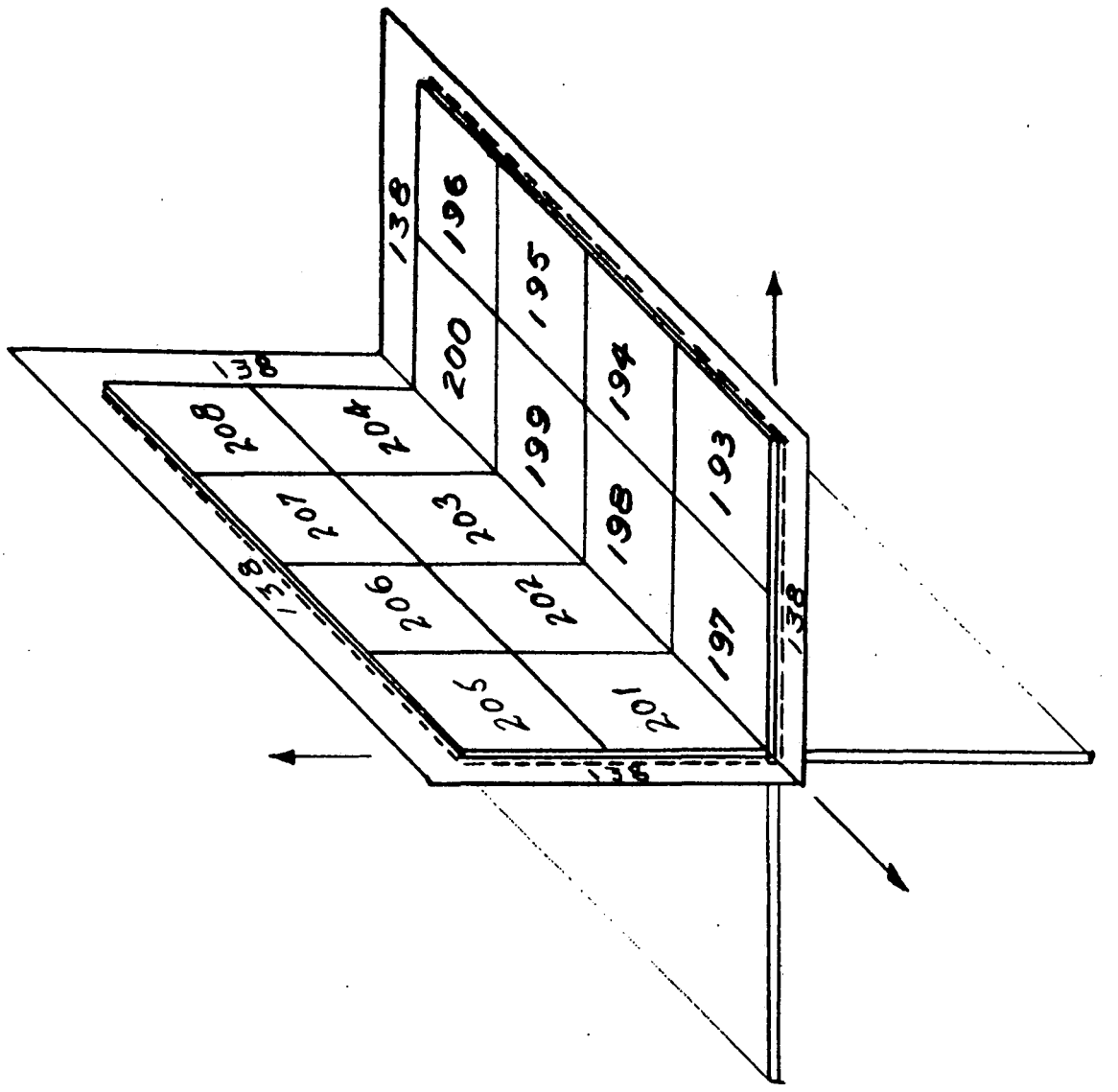

Figure B-5. ATM Spar Nodes, Quadrant III

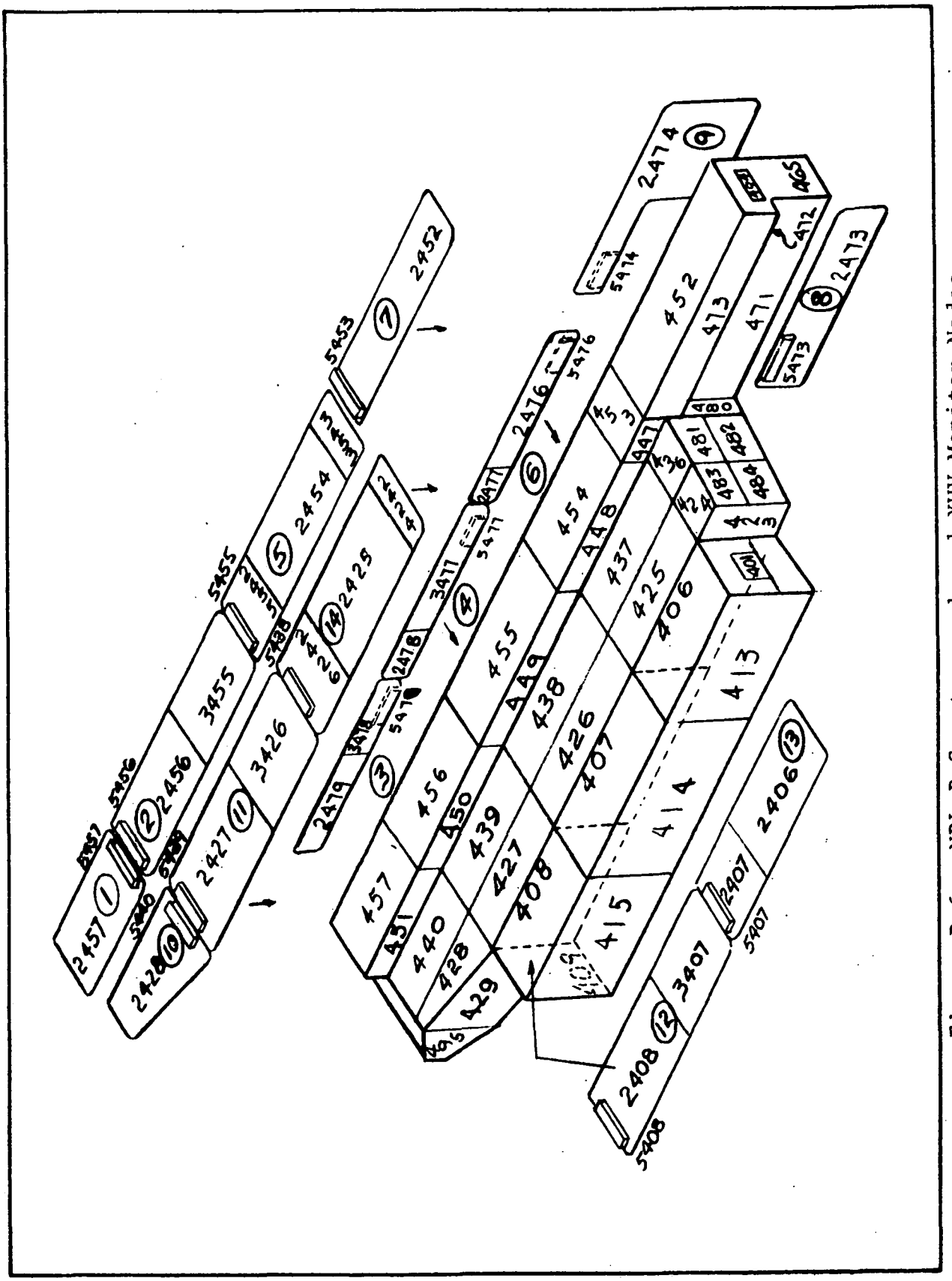

Figure B-6. NRL-B Spectrograph and XUV Monitor Nodes

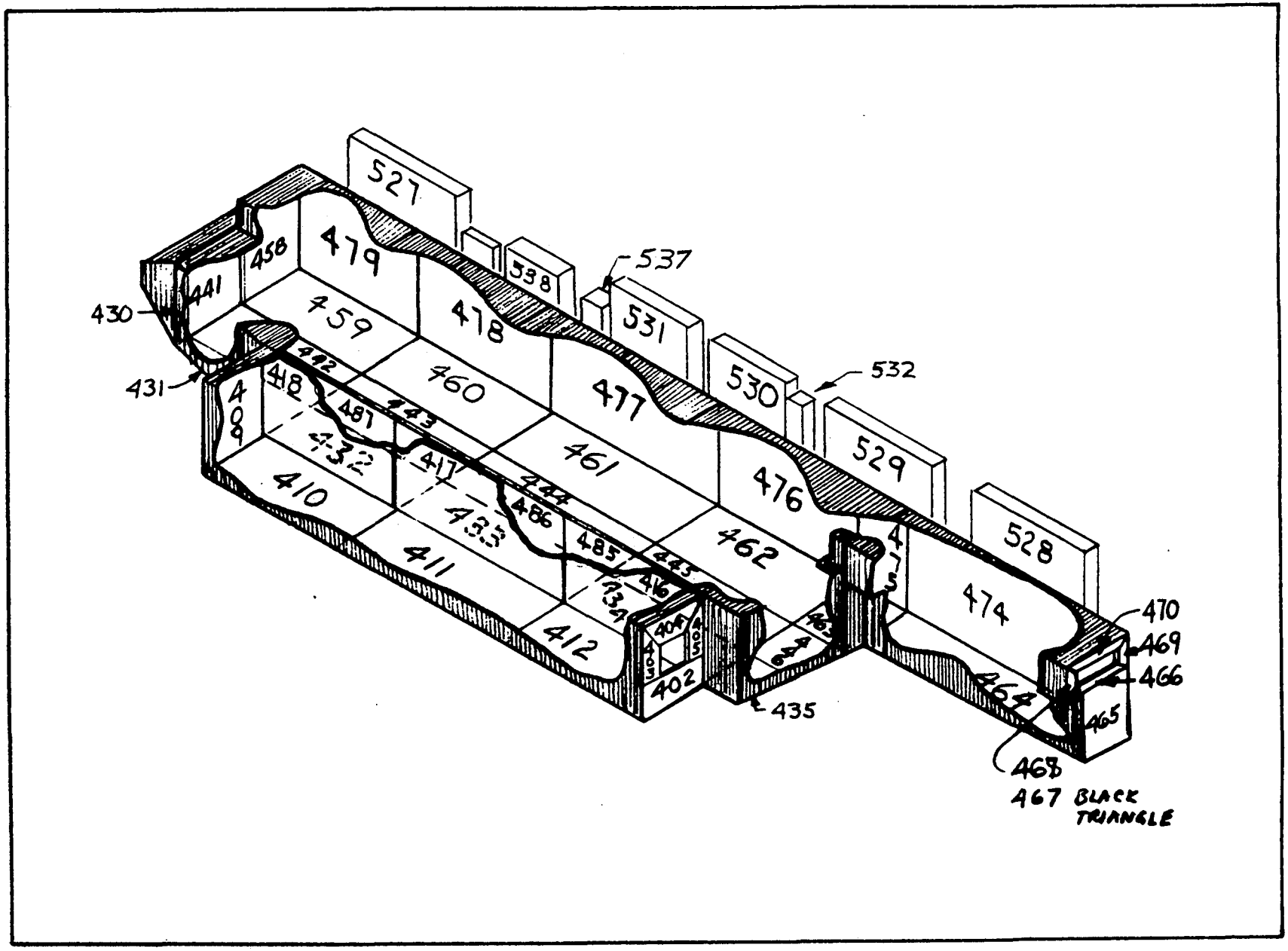

Figure B-7. NRL-B Spectrograph and XUV Monitor, Interior Nodes

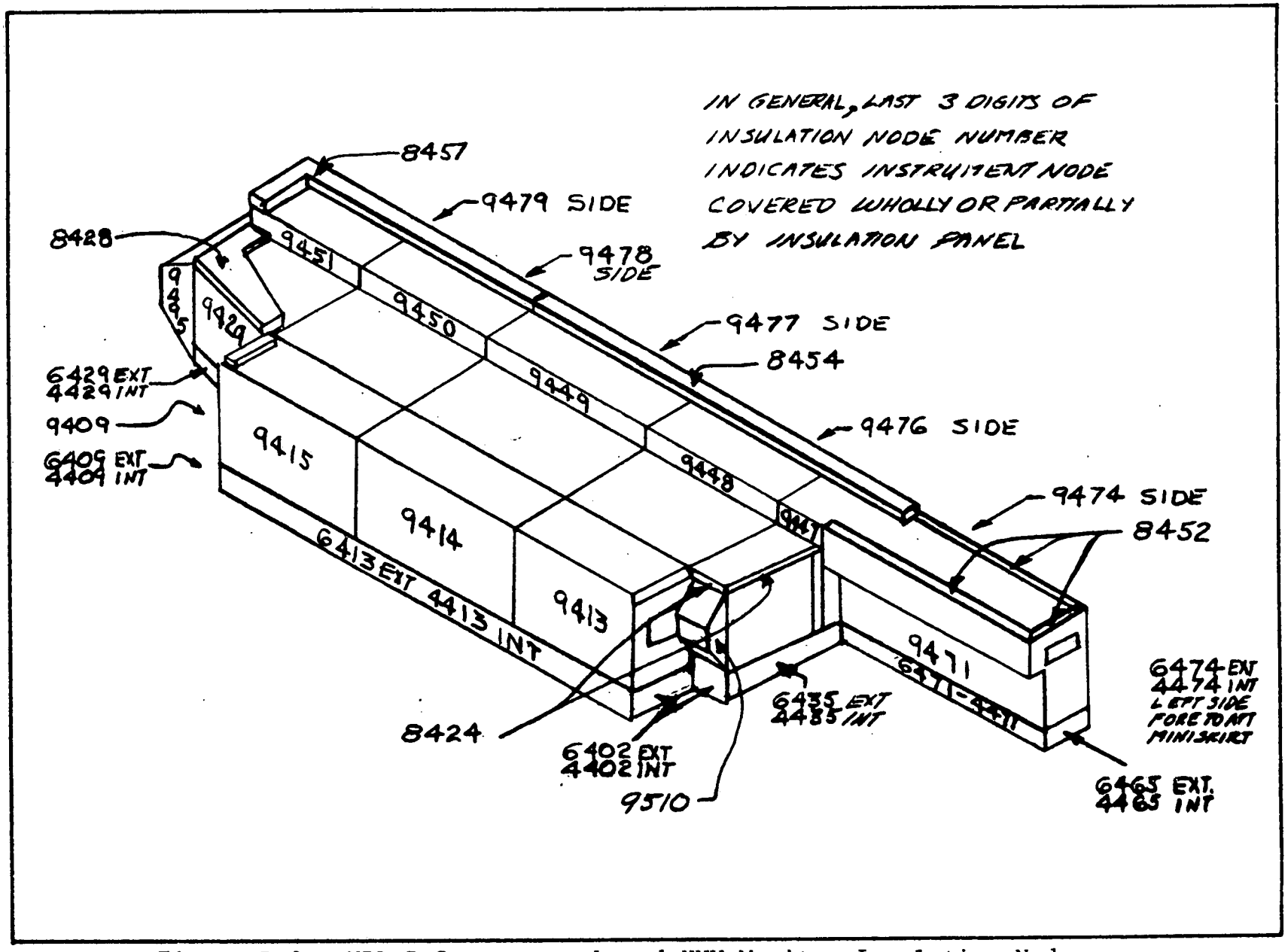

Figure B-8. NRL-B Spectrograph and XUV Monitor Insulation Nodes

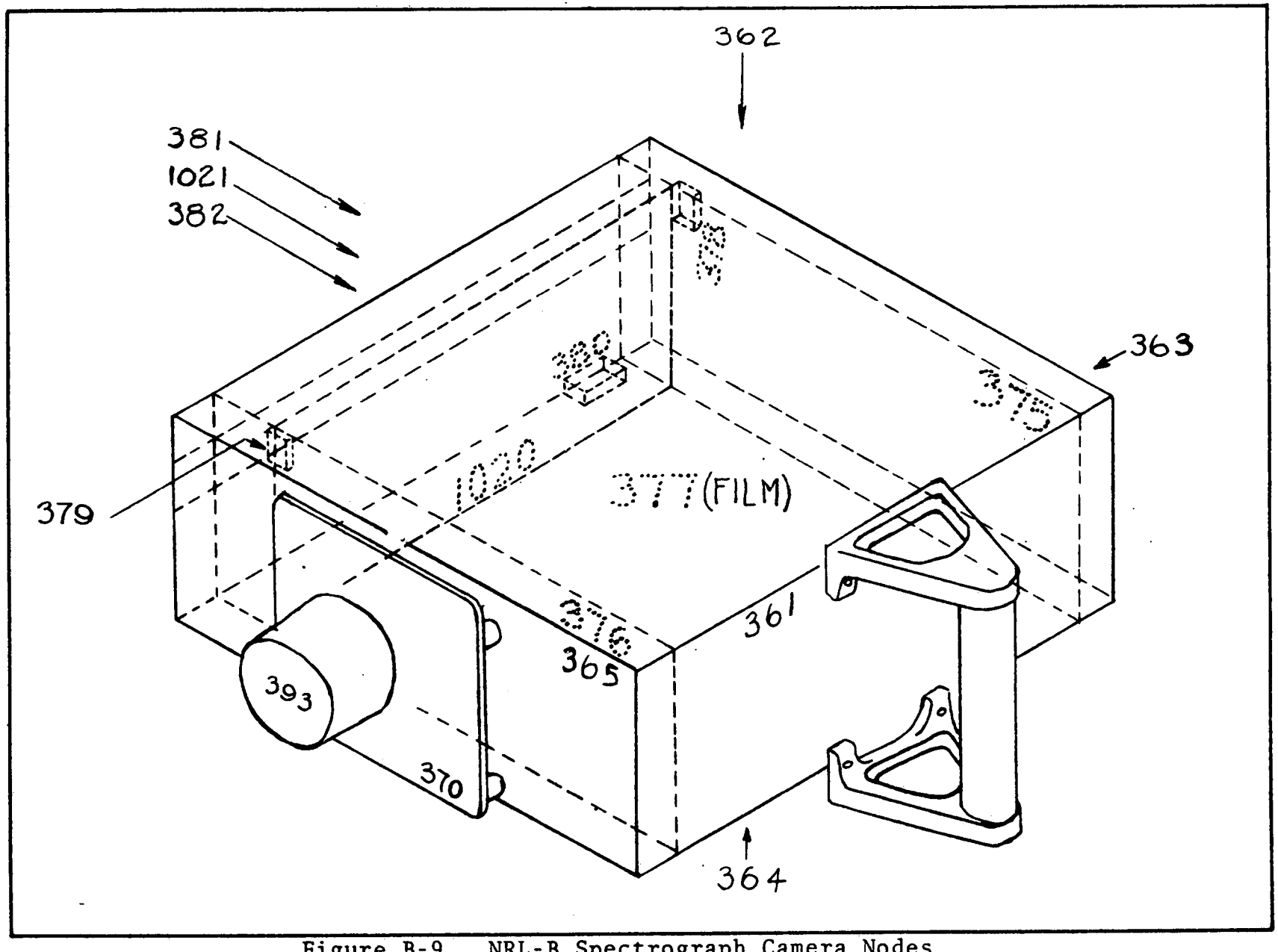

Figure B-9. NRL-B Spectrograph Camera Nodes

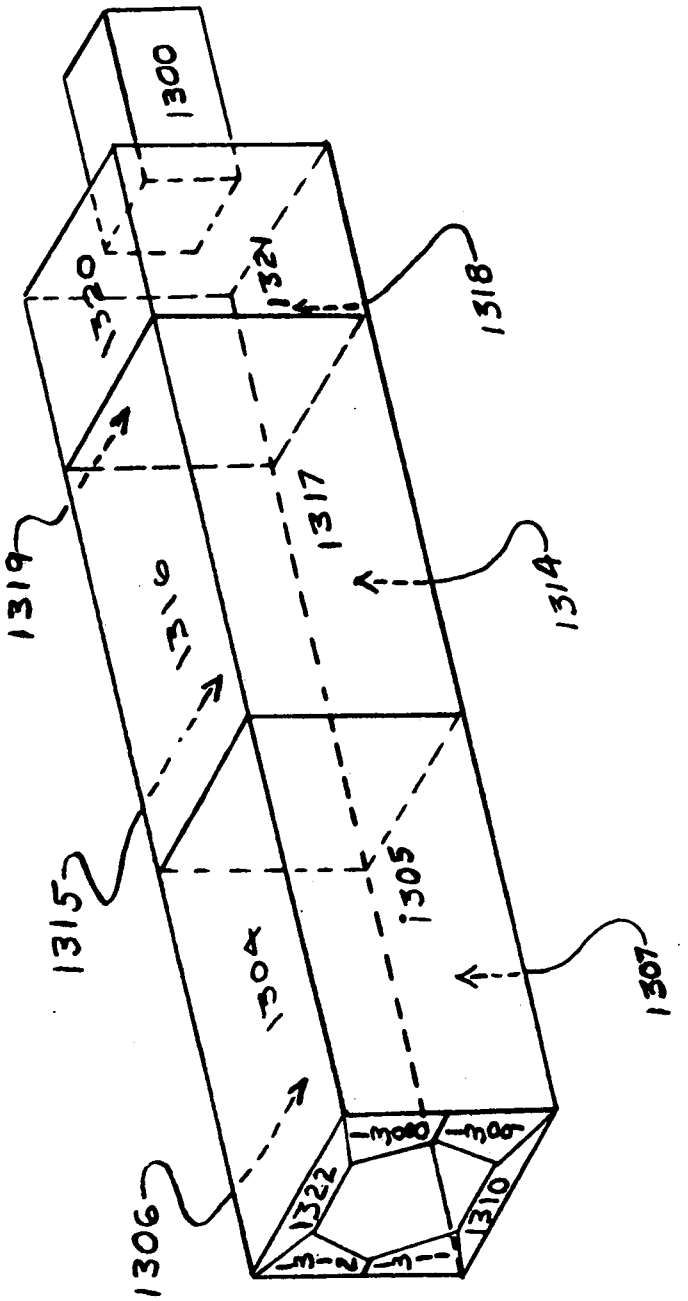

Figure B-10. ATM Hα Experiment Nodes

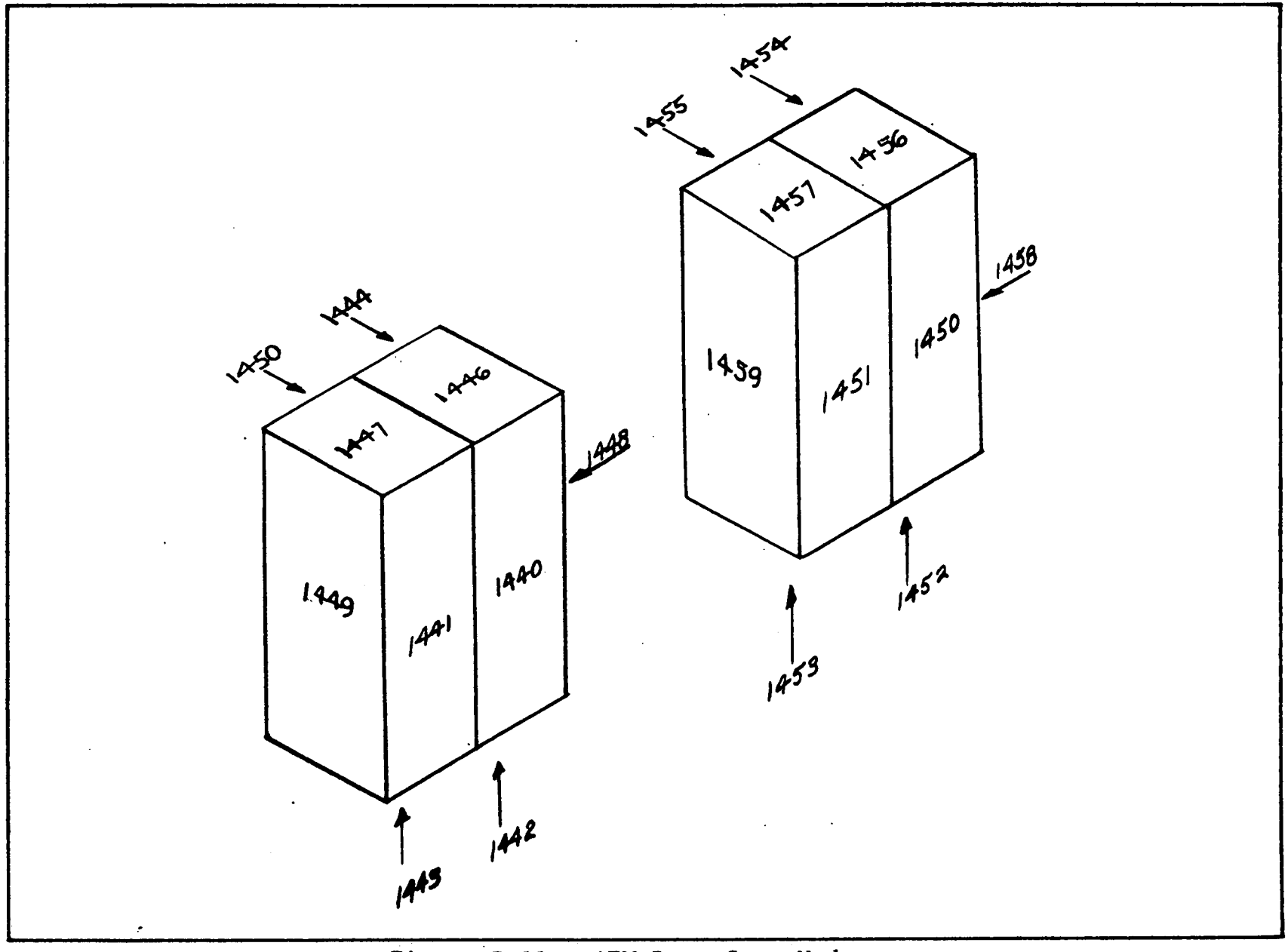

Figure B-11. ATM Rate Gyro Nodes

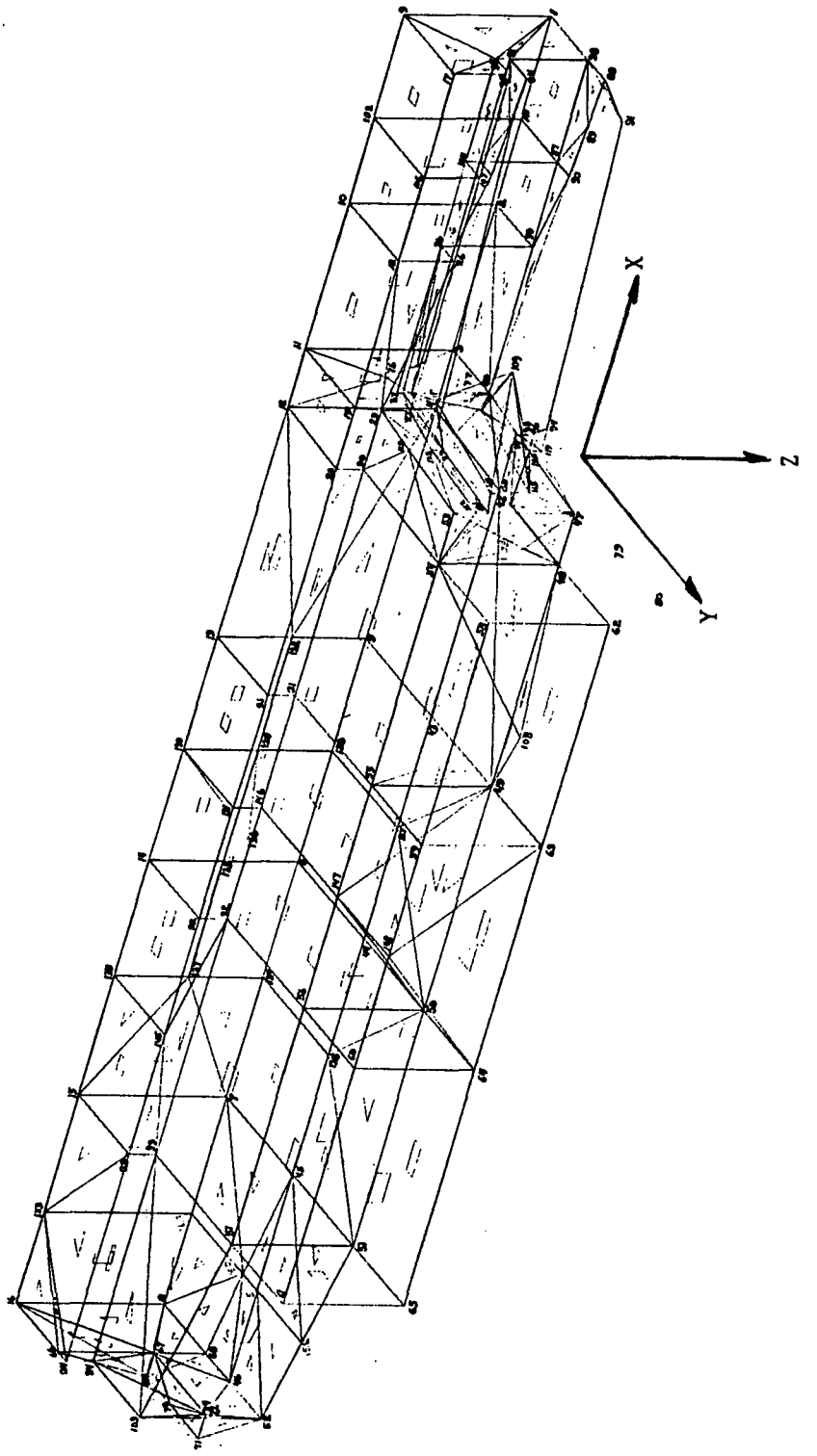

Figure B-12. NRL-B Spectrograph and XUV Monitor Structural Model

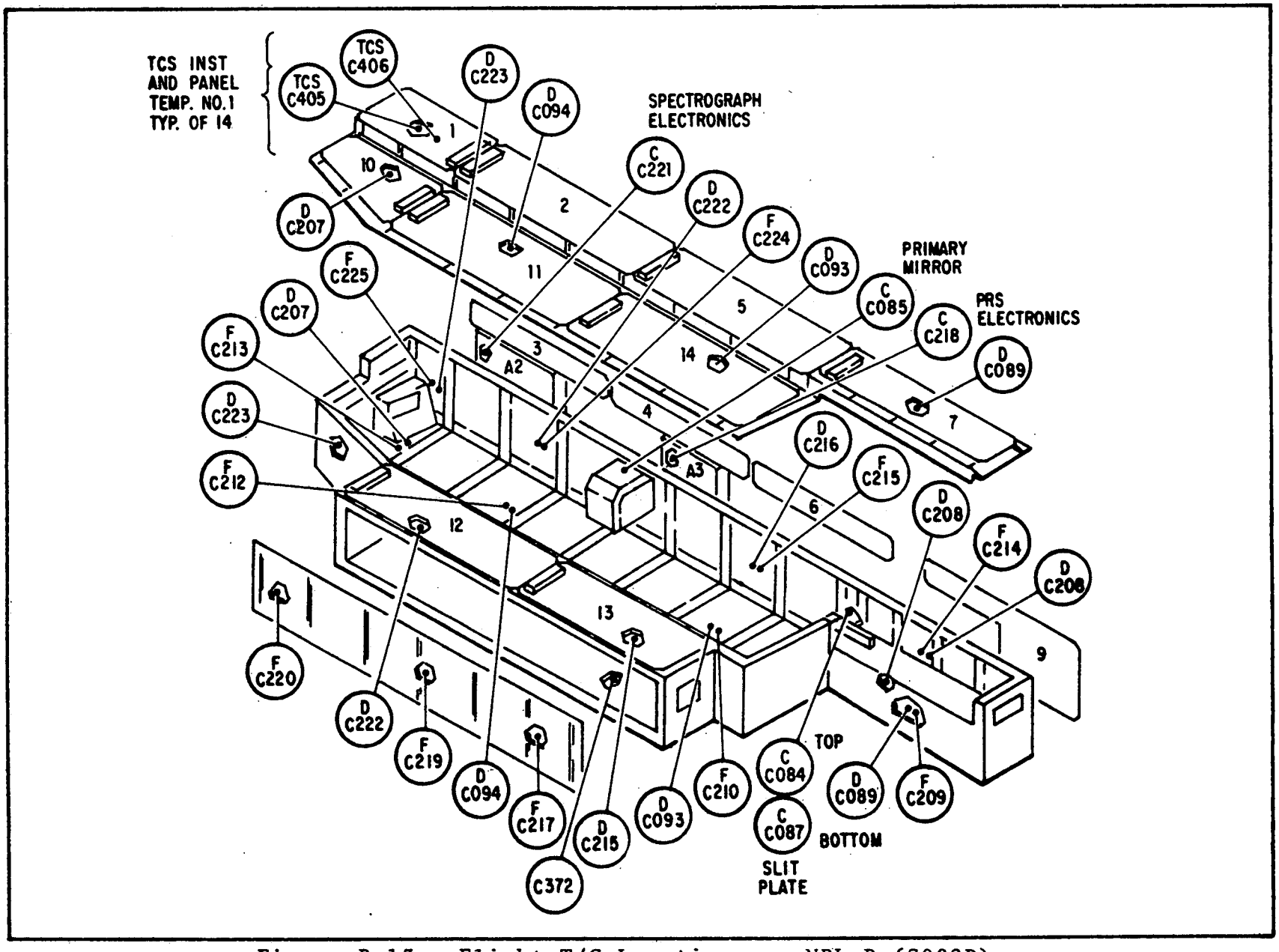

Figure B-13. Flight T/C Locations on NRL-B (S082B)

Table B-1

CORRELATION:
THERMAL MODEL NODE NUMBERS
AND
SKYLAB/ATM MEASUREMENT NUMBERS

Node Number	Equation in Terms of Measurement Number	Description
121	C-286 + [C-288 x 3/16]	Canister
122	C-286 + [C-287 x 3/16]	Canister
123	C-286 + [C-288 x 1/16]	Canister
124	C-286 + [C-287 x 1/16]	Canister
143	C-317	Sun End
144	C-317	Sun End
151	C-313	MDA End
152	C-313	MDA End
193	[C-319 + C-320 + C-321]/3	Spar
194		
195		
196		
197		
198		
199		
200		
201		
202		
203		
204		
205		
206		
207		
208	[C-319 + C-320 + C-321]/3	Spar

Node Number	Equation in Terms of Measurement Number
413	C-217
414	C-219
415	C-220
429	C-225 - C-223
437	C-210 + C-093
438	C-212 + C-094
439	C-212 + C-094
440	C-213 + C-207
442	C-213
443	C-212
444	C-212
445	C-210
452	C-209 + C-089
454	C-413
456	C-407
457	C-405
464	C-209
471	C-214 - C-208
473	C-417
474	C-214
476	C-215 (Backup CO 415)
477	C-224
479	C-225
485	C-215 - C-216
486	C-224 - C-222

Description

NRL Case

NRL Case

Node Number	Equation in Terms of Measurement Number	Description
1308	C-196	Hα Front
1309		
1310		
1311		
1312		
1322	C-196	Hα Front
1300	C-373	Hα Camera
1301	C-386	Hα Rear
1302		Hα Rear
1303		Hα Rear
1304		Hα Fwd.
1305		Hα Fwd.
1306		Hα Fwd.
1307		Hα Fwd.
1313		Hα Rear
1314		Hα Mid.
1315		Hα Mid.
1316		Hα Mid.
1317		Hα Mid
1318		Hα Aft.
1319		Hα Aft.
1320		Hα Aft.
1321	C-386	Hα Aft.

Node Number	Equation in Terms of Measurement Number	Description
1440	C-282	Pri. Gyro
1441		
1442		
1443		
1444		
1445		
1446		
1447		
1448		
1449	C-282	Pri. Gyro
1450	C-444	2nd Gyro
1451		
1452		
1453		
1454		
1455		
1456		
1457		
1452		
1459	C-444	2nd Gyro

Node Number	Equation in Terms of Measurement Number	Description
559	[C-084 + C-087]/2	Slit Plate Assy
555	C-085	Primary Mirror Support
2406	C-431	TCS Heaters
2407	C-431	
2403	C-429	
2424	C-426	
2425	C-426	
2426	C-426	
2427	C-427	
2428	C-421	
2452	C-419	
2454	C-414	
2455	C-414	
2456	C-410	
2457	C-406	
2473	C-424	
2474	C-423	
2476	C-416	
2477	C-416	
2478	C-412	
2479	C-408	TCS Heaters

Node Number	Equation in Terms of Measurement Number	Description
3407	C-429	TCS Heaters
3426	C-427	
3453	C-414	
3455	C-410	
3477	C-412	
3478	C-408	TCS Heaters
1494		Inst. Aperture
1401		XUV Aperture

DATA REQUIRED FOR THERMAL DISTORTION ANALYSIS

NODE NO.	MEASUREMENT NO. & DESCRIPTION NO.	DESCRIPTION
559	C0084	TEMP. SLIT PLATE TOP
555	C0085	TEMP. PRIMARY MIRROR FRAME
559	C0087	TEMP. SLIT PLATE BOTTOM
--	C0089	DIFF. TEMP. FRT PLANE LID TO BASE
--	C0093	" " FRT CTR LID TO BASE
--	C0094	" " REAR CTR LID TO BASE
--	C0207	" " REAR PLANE LID TO BASE
--	C0208	" " FRT PLANE SIDE TO SIDE
464	C0209	TEMP. FRT PLANE BASE
445	C0210	" FRT CTR BASE
443/444	C0212	" REAR CTR BASE
442	C0213	" REAR PLANE BASE
474	C0214	" FRT PLANE LEFT SIDE
476	C0215	" FRT CTR LEFT SIDE
--	C0216	DIFF. TEMP. FRT CTR SIDE TO SIDE
413	C0217	TEMP. XUV MONITOR FRONT
414	C0219	" XUV MONITOR CTR
415	C0220	" XUV MONITOR REAR
--	C0222	DIFF. TEMP. REAR CTR SIDE TO SIDE
--	C0223	" " REAR PLANE SIDE TO SIDE
477	C0224	TEMP. REAR CTR LEFT SIDE
479	C0225	" REAR PLANE LEFT SIDE
457	C0405	" INST. REF. TEMP PANEL 1

NODE NO.	MEASUREMENT NO.	DESCRIPTION
456	C0407	TEMP. INST. REF. TEMP. PANEL 2
454	C0413	" INST. REF. TEMP. PANEL 5
473	C0417	" INST. REF. TEMP. PANEL 8
2457	C0406	TEMP. TCS HEATER PANEL 1
2479/3478	C0408	" " " " 3
2456/3455	C0410	" " " " 2
2478/3477	C0412	" " " " 4
2455/2454/3453	C0414	" " " " 5
2477/2476	C0416	" " " " 6
2452	C0419	" " " " 7
2428	C0421	" " " " 10
2474	C0423	" " " " 9
2473	C0424	" " " " 8
2424/2425/2426	C0426	" " " " 14
2427/3426	C0427	" " " " 11
2408/3407	C0429	" " " " 12
2406/2407	C0431	" " " " 13
	K0244	XUV MONITOR APERTURE DOOR OPEN
	K0178	LIMB SCANNING ON
	K0179	SPECTRAL SEQUENCE ON
	M0301	INST. APERTURE DOOR OPEN
	K0180	BORESIGHT ON (WL)

NODE NO.	MEASUREMENT NO.	DESCRIPTION
CANISTER		
121 to 124	C0286	TEMP. PRI. M/W INLET TO CAN
" " "	C0287	TEMP. DIFF. M/W INLET TO OUTLET CAN
" " "	C0288	TEMP. DIFF. M/W INLET TO OUTLET CAN
151/152	C0313	TEMP. MDA END CANISTER
143/144	C0317	TEMP. SUN END CANISTER
SPAR		
193 to 208	C0319	TEMP. SPAR MDA END
	C0320	" " MIDPOINT
	C0321	" " SUN END
GYRO		
1440 to 1449	C0282	TEMP. RATE GYRO PITCH SPAR PRI.
1450 to 1459	C0444	TEMP. PITCH RATE GYRO SEC.
Hα		
1300 Series	C0196	TEMP. HEAT REJ. WINDOW ATM Hα
	C0373	TEMP. ATM Hα CAMERA
	C0386	TEMP. PRI. MIRROR CELL ATM Hα

Table B-3
S082B Heat Flux Table

Basic Heat Flux			Added Fluxes See Notes		
Ident.	Node	Ready(1)	Inst. Ap.(2) Open	XUV Ap.(3) Open	PRS On(4)
1A1	536	0.000	0.0	0.0	3.410
1A2	527	9.890	0.0	0.0	.330
1A3	531	0.068	0.0	0.0	5.047
1A4	530	3.410	0.0	0.0	0.0
1A5	529	1.705	0.0	0.0	0.0
1A6	528	1.023	0.0	0.0	0.068
1A7	535	1.364	0.0	0.0	0.341
1A8	538	0.375	0.0	0.0	0.0
1A10	537	2.830	0.0	0.0	0.0
2A1	533	0.341	0.0	0.0	0.0
XUV LLLC	543	17.732	0.0	0.0	0.0
XUV Apmtr	562	0.0	0.0	0.068	0.0
Inst. Apmtr	566	0.0	0.068	0.0	0.0
PRS Idt	558	0.0	0.0	0.0	16.040
PRS Matrix	532	0.0	0.0	0.0	20.478
SOLAR					
Mirror	550	0.0	6.62	0.0	0.0
Slit & Slot	559	0.0	3.28	0.0	0.0
XUV Filter	401	0.0	0.0	6.93	0.0
XUV Bezel	402	0.0	0.0	0.47	0.0
XUV Bezel	403	0.0	0.0	0.47	0.0
XUV Bezel	404	0.0	0.0	0.47	0.0
XUV Bezel	405	0.0	0.0	0.47	0.0
Inst. Bezel	466	0.0	0.05	0.0	0.0
"	467	0.0	0.16	0.0	0.0
"	468	0.0	0.11	0.0	0.0
"	469	0.0	0.11	0.0	0.0
"	470	0.0	0.22	0.0	0.0
TCS	Multi		0.0	0.0	0.0

1) All operating modes use same basic flux table.

2) Read M0301-82B if $\geq$ 4.7 VDC instrument aperture is open--add listed fluxes to basic flux.

3) Read K0244-82B if $\geq$ 4.5 VDC add fluxes listed to basic flux table.

4) Read K0178-82B if $\geq$ 4.5 VDC add fluxes listed to basic flux table if < 4.5 VDC continue.

Read K0179-82B if $\geq$ 4.5 VDC add fluxes listed to basic flux table if < 4.5 VDC continue.

Read K0180-82B if $\geq$ 4.5 VDC add fluxes listed to basic flux table if < 4.5 VDC the PRS is off and no fluxes are added to basic flux table.

LISTING OF
S082B
THERMAL ANALYTICAL MODEL
NOMINAL DATA DECK

```
         1         2         3         4         5         6         7
12345678901234567890123456789012345678901234567890123456789012345678901234567890
NRL B THERMAL ANALYTICAL MODEL UPDATED TO FLT CONFIGURATION 3-15 73 RRA
NRL B UPDATE RUN 1145 3-15-73 RRA
0.0       1.4778    .0040     1.0       1.0       0.1
99999999999
  49                  SPAR INSULATION, ATM
  50
  51
  52
  53
  54
  55
  56
  57
  58
  59
  60
  61
  62
  63
  64
  70
  72
  73
  75
  76
  77                  SPAR INSULATION, ATM
 121                  CANISTER SIDEWALL, ATM
 122
 123
 124                  CANISTER SIDEWALL, ATM
 138                  CANISTER-SPAR CLOSURE, ATM
 143        1.60      CANISTER-SUN END, ATM
 144        1.38      CANISTER-SUN END, ATM
 151        1.6       CANISTER-MDA END
 152        1.38      CANISTER-MDA END
 193        3.753     SPAR, ATM
 194        3.753
 195        3.753
 196        3.753
 197        3.702
 198        3.702
 199        3.702
 200        3.702
 201        3.702
 202        3.702
 203        3.702
 204        3.702
 205        3.753
 206        3.753
 207         3.753
 208        3.753     SPAR, ATM
```

361	0.3726	CAMERA, FRONT
362	0.3847	TOP
363	0.1219	LEFT SIDE
364	0.3255	BOTTOM
365	0.1219	RIGHT SIDE
370	0.2031	MOTOR MOUNT PLATE
375	2.2300	PARTITION, RIGHT SIDE
376	2.2300	PARTITION, LEFT SIDE
377	2.76	FILM
378	0.0216	PAWL RELEASE SOLENOID
379	0.0216	PAWL RELEASE SOLENOID
380	0.0882	SHUTTER SOLENOIDS
381	0.1196	REAR PLATE
382	0.2497	REAR PLATE
393	0.1293	MOTOR
1020	2.23	ALUMINUM FILTER AND FILM CARRIER
1021		CAMERA, SHUTTER
401		XUV MONITOR ALUMINUM FILTER
1401		ATM CANISTER APERTURE, XUV MONITOR
402	0.3727	XUV MONITOR CASE FWD, BOTTOM
403	0.1372	FWD, RIGHT
404	0.1209	FWD, TOP
405	0.1153	FWD, LEFT
406	0.929	TOP, FWD
407	1.050	TOP, MID
408	0.800	TOP, AFT
409	0.908	AFT
410	0.7183	BOTTOM, AFT
411	0.9470	BOTTOM, MID
412	1.152	BOTTOM, FWD
413	.752	RIGHT, FWD
414	0.705	RIGHT, MID
415	0.689	RIGHT, AFT
416	0.6667	LEFT, FWD
417	0.4420	LEFT, MID
418	0.2990	LEFT, AFT
423	0.2345	INSTRUMENT CASE RIGHT, FWD
424	0.1541	TOP, RIGHT, FWD
425	0.4184	
426	0.4693	
427	0.4087	
428	0.3734	AFT
429	0.7585	RIGHT, AFT
430	0.1587	AFT, RIGHT
431	0.295	BOTTOM, RIGHT AFT
432	0.6225	
433	0.826	
434	0.6865	FWD
435	0.2070	
436	0.1062	TOP, MID FWD
437	0.3195	
438	0.3268	

439	0.2810	INSTRUMENT CASE, TOP MID
440	0.3607	" " AFT
441	0.4285	AFT MID "
442	0.362	BOTTOM MID AFT
443	0.358	
444	0.3050	
445	0.3779	
446	0.1024	" " FWD
447	0.062	INSTRUMENT CASE, TOP RISER FWD
448	0.1987	
449	0.2034	
450	0.1757	
451	0.1930	" " AFT
452	1.256	INSTRUMENT CASE, TOP LEFT FWD
453	0.476	
454	0.588	
455	0.602	
456	0.6022	
457	0.597	" " AFT
458	0.7595	INSTRUMENT CASE, AFT LEFT
459	0.750	INSTRUMENT CASE, BOTTOM, LEFT, AFT
460	0.450	
461	0.5750	
462	0.5050	
463	0.3202	
464	0.6685	" " FWD
465	0.286	FRONT UNDER APERTURE
466	0.042	INSTRUMENT CASE, FRONT APERTURE BEZEL BOTTOM
467	0	" " " RIGHT
468	0.0494	" " " RIGHT
469	0.0494	" " " LEFT
470	0.1722	" " " TOP
471	0.730	RIGHT FWD
472	0.1312	RIGHT FWD
473	0.795	RIGHT FWD
474	1.410	LEFT FWD
475	0.3705	
476	0.9375	
477	1.5770	
478	1.2951	
479	0.9465	LEFT AFT
480	0.1993	FWD CAMERA INTERFACE
481	0.1930	
482	0.2000	
483	0.570	
484	0.2914	
485	0.983	RIGHT FWD JOINS XUV NODE 416
486	1.098	" MID " " " 417
487	1.014	" AFT " " " 418
488		INSTRUMENT INTERIOR LIGHT BAFFLE
489		
494		INSTRUMENT APERTURE

1494	0	ATM CANISTER APERTURE
495	0.9575	AFT THERMAL MOUNT STRUCTURE TRIPOD BRACKET
503	0.0778	INTERIOR LIGHT BAFFLE
504	0.1059	
505		
506		
507		
508		
510	0.6337	BRACKET, LEFT SIDE LEG
511	0.4783	RIGHT SIDE LEG
512	0.6910	LEGS, RIGHT, FWD SLANT AND VERTICAL
513	0.2998	LEG LEFT FWD
514	0.1773	MOUNT, TRIPOD TABLE
515	0.2688	LEG, TRIPOD FWD
516	0.2688	LEG, TRIPOD RIGHT REAR
616	0.2688	LEG, TRIPOD LEFT REAR
517	0.2236	XUV PARABOLIC MIRROR, FWD SIDES AND TOP
518	0.2236	XUV PARABOLIC MIRROR, REAR
519	0.1205	DIODE FLASHER
520		INTERIOR LIGHT BAFFLE
521		
522		
523	0.0513	
524	0.0622	
525		
526		INTERIOR LIGHT BAFFLE
527	1.6699	A2 ELECTRONICS BOX
528	1.8699	A6 ELECTRONICS BOX
529	1.8699	A5 ELECTRONICS BOX
530	1.3306	A4 ELECTRONICS BOX
531	1.3306	A3 ELECTRONICS BOX
532	0.2550	PRS POWER CONVERTER
533	0.3918	2A1 ELECTRONICS BOX
534	0.3250	BRACKET, CABLE MOUNT
535	1.485	A7 ELECTRONICS BOX
536	0.1423	A1 ELECTRONICS BOX
537	0.1703	TCS POWER CONVERTER
538	1.0045	A8 ELECTRONICS BOX
539	1.1336	MAIN GRATING
540	2.681	CAMERA GUIDE
543	2.4970	XUV MONITOR VIDICON
546	0.2657	PREDISPERSER ASSY
547	0.1207	
548	0.0768	
549	0.0716	PREDISPERSER GRATING
550	0.2725	PRIMARY MIRROR FWD
551	0.2725	" " REAR
552	0.1739	" " FRAME
553	0.2247	" " BASE
555	0.4838	" " SUPPORT
557	0.3298	BRACKET, IDT TUBE ATTACH
558	0.4345	IDT TUBE ASSEMBLY

559	0.119	SLIT-RELAY LENS ASSY
562	0.2981	XUV MONITOR DOOR ACTUATOR
563	0.7575	XUV MONITOR MIRROR MOUNT
566	0.0394	INSTRUMENT DOOR ACTUATOR
570		INTERIOR LIGHT BAFFLE
571	0.0534	
572		
573	0.0818	
574	0.0308	
575	0.0508	
576	0.0404	
577	0.0610	
578	0.0529	
579	0.0411	
580		
581		INTERIOR LIGHT BAFFLE
1300	1	Hα EXPERIMENT
1301	1	
1302	1	
1303	1	
1304	1	
1305	1	
1306	1	
1307	1	
1308		
1309		
1310		
1311		
1312		
1313	1	
1314	1	
1315	1	
1316	1	
1317	1	
1318	1	
1319	1	
1320	1	
1321	1	
1322		Hα EXPERIMENT
1440	0.3515	ATM RATE GYRO FWD
1441	0.3515	
1442	0.2278	
1443	0.2278	
1444	0.3515	
1445	0.3515	
1446	0.2278	
1447	0.2278	
1448	0.3362	
1449	0.3362	ATM RATE GYRO FWD
1450	0.3515	ATM RATE GYRO AFT
1451	0.3515	
1452	0.2278	ATM RATE GYRO AFT

1453	0.2278	ATM RATE GYRO, AFT
1454	0.3515	
1455	0.3515	
1456	0.2278	
1457	0.2278	
1458	0.3362	
1459	0.3362	ATM RATE GYRO AFT
2406	0.1315	HEATER, THERMAL CONTROL
2407	0.0570	
3407	0.0865	
2408	0.1292	
2424	0.0310	
2425	0.1650	
2426	0.0694	
3426	0.1055	
2427	0.1576	
2428	0.1306	
2452	0.1732	
3453	0.0317	
2454	0.1335	
2455	0.0563	
3455	0.0855	
2456	0.1277	
2457	0.1322	
2473	0.13410	
2474	0.1884	
2476	0.0688	
2477	0.0201	
3477	0.0480	
2478	0.0379	
3478	0.0239	
2479	0.0620	HEATER, THERMAL CONTROL
4402		THERMAL SKIRT INSULATION, INTERIOR SURFACE
4409		
4413		
4429		
4435		
4465		
4471		
4474		THERMAL SKIRT INSULATION, INTERIOR SURFACE
4495		AFT THERMAL MOUNT, INTERIOR SURFACE
4510		~~INSULATION LEFT LEG BRACKET, INTERIOR SURFACE~~
4511		INSULATION RIGHT LEG BRACKET, INTERIOR SURFACE
5407	0.04266	CONTROLLER, THERMAL CONTROL SUBSYSTEM
5408	0.04266	
5438	0.04266	
5439	0.04266	
5440	0.04266	
5453	0.04266	
5455	0.04266	
5456	0.04266	
5457	0.04266	CONTROLLER, THERMAL CONTROL SUBSYSTEM

```
                1         2         3         4         5         6         7         8
12345678901234567890123456789012345678901234567890123456789012345678901234567890123456789
 5473      0.04266          CONTROLLER, THERMAL CONTROL SUBSYSTEM
 5474      0.04266
 5476      0.04266
 5477      0.04266
 5479      0.04266          CONTROLLER, THERMAL CONTROL SUBSYSTEM
 6402                       THERMAL SKIRT INSULATION EXTERIOR SURFACE
 6409
 6413
 6429
 6435
 6465
 6471
 6474                       THERMAL SKIRT INSULATION EXTERIOR SURFACE
 8424                       INSULATION PANEL NODE 424
 8428                                             428
 8452                                             452
 8454                                             454
 8457                                             457
 9409                                             409
 9413                                             413
 9414                                             414
 9415                                             415
 9429                                             429
 9447                                             447
 9448                                             448
 9449                                             449
 9450                                             450
 9451                                             451
 9471                                             471
 9474                                             474
 9476                                             476
 9477                                             477
 9478                                             478
 9479                                             479
 9495                                             495
 9510                                             510
 9511                       INSULATION PANEL NODE 511
99999999999
 1401 0.6078    1.4778      APERTURE OPEN & CLOSE TIMES
 1494 0.6078    1.4778
99999999999
999999999999999             IF NORMAL THERMAL CONTROL SYSTEM HEATER OPERATION IS USED, HEATER DATA CARDS ARE INSERTED HERE-SEE LIST. *
   49  58.18940E 00  49  59.30440E 00  49  60.40060E 00  49 122.13210E 00
   49 124.35970E 00  49 151.29660E 00  49 152.17030E 00  49 196.77400E-05
   49 199.18580E-04  49 200.60840E-03  49 534.13890E+00  49 535.59200E-01
   49 536.16160E-01  49 1442.23740E-01  49 1443.18790E-01  49 1448.89750E-02
   49 1452.30980E-01  49 1453.52110E-01  49 6409.40560E-01  49 6429.11660E 00
   49 9409.10910E 00  49 9429.14890E 00  49 9495.10660E 00  50   58.58550E-01
   50   59.43570E-01  50  122.32450E-01  50  124.30290E 00  50  151.40240E 00
   50  152.13520E 00  50  196.27240E-03  50  200.30960E-05  50 1450.77300E-02
   50 1452.70160E-02  50 1453.94160E-02  50 9495.24930E 00  51   70.13870E-01
   51   73.18410E-01  51  195.27860E-04  51  196.38240E-03  51  199.15480E-04
                      LIST OF RADIATION EXCHANGE FACTORS B_N-M's (FT^2) BEGINS HERE
```

* FINAL SHEET OF THIS LIST

1	2	3	4	5	6	7	8
51 200.12070E-03	51 431.32560E 00	51 432.94800E-02	51 442.43050E 00
51 443.91930E-02	51 459.61570E 00	51 460.13270E-01	51 515.72910E-02
51 516.21770E-02	51 616.26410E-02	51 4429.91950E-01	51 4474.80290E-01
51 4495.62410E-01	52 121.60520E 00	52 138.25250E-01	52 143.25800E-01
52 193.18500E-03	52 194.77400E-05	52 528.31090E-01	52 2474.10970E-01
52 6474.22060E-01	52 9510.22490E-01	53 60.10460E-01	53 62.15530E 00
53 64.11630E-01	53 198.23220E-04	53 199.32510E-04	53 6413.77370E-01
53 9413.71980E-02	53 9414.77010E-02	54 121.46350E 00	54 122.77690E 00
54 188.47780E-01	54 194.17800E-03	54 195.19970E-03	54 196.11610E-03
54 527.13950E 00	54 529.22090E-01	54 530.69600E-01	54 531.37800E-01
54 532.21550E-01	54 537.72480E-02	54 538.41230E-01	54 6474.19230E 00
54 9476.26250E-01	54 9478.72250E-01	55 56.96900E-01	55 61.21810E-01
55 63.18230E 00	55 64.61680E 00	55 121.43570E-01	55 123.20500E 00
55 138.33590E-01	55 143.17720E 00	55 144.12190E 00	55 197.42720E-03
55 198.35600E-04	55 361.46260E-02	55 362.80170E-02	55 363.30010E-02
55 364.16460E-01	55 365.12110E-01	55 370.13630E-01	55 393.91510E-02
55 401.76610E-03	55 402.31250E-01	55 403.64590E-02	55 404.13300E-01
55 405.18920E-02	55 423.79230E-03	55 473.17720E-03	55 480.18300E-03
55 481.32260E-03	55 482.93000E-03	55 483.48470E-03	55 484.13400E-02
55 511.99260E-02	55 512.12990E-01	55 540.30320E-01	55 562.23180E-01
55 1307.96250E-02	55 1314.76620E-02	55 1401.16630E-01	55 1494.18380E-02
55 2424.62780E-03	55 5473.10520E-03	55 6402.27330E-01	55 6435.56580E-02
55 8424.31550E-01	55 9511.56930E-01	56 63.16660E 00	56 64.27320E 00
56 123.23260E 00	56 138.94480E-01	56 143.28100E 00	56 144.11900E 00
56 193.37770E-03	56 197.30500E-03	56 361.16790E-01	56 362.14100E-01
56 363.95640E-02	56 364.13320E 00	56 370.40880E-02	56 393.13150E-02
56 403.15230E-02	56 404.24830E-02	56 473.12660E-03	56 480.11160E-02
56 481.35200E-03	56 482.92000E-03	56 483.39690E-03	56 484.13400E-02
56 512.24430E-02	56 540.19410E 00	56 1307.75630E-02	56 1314.22010E-02
56 1401.13980E-01	56 1494.32840E-02	56 5473.85670E-04	56 6402.39520E-02
56 6435.10680E 00	56 6471.22610E 00	56 8424.21640E-01	56 9511.89040E-02
57 121.70480E-03	57 138.13130E-02	57 143.90280E-02	57 6465.78900E-02
58 60.47610E-01	58 122.54170E 00	58 124.87140E 00	58 151.20820E 00
58 152.40250E 00	58 203.27000E-04	58 204.13430E-03	58 207.35500E-04
58 208.85200E-03	58 534.17970E-01	58 535.26900E-01	58 536.13170E-01
58 1442.80810E-01	58 1443.49070E-01	58 1444.29280E 00	58 1445.14920E 00
58 1446.13080E-01	58 1447.82190E-02	58 1448.34920E-01	58 1452.83910E-01
58 1453.69630E-02	58 1454.29280E 00	58 1455.29280E 00	58 1456.13320E-01
58 1457.13250E-01	58 1458.86820E-01	58 1459.86440E-01	58 2408.10380E-01
58 2427.35180E-02	58 2428.79120E-02	58 2457.29280E-02	58 5408.34460E-03
58 5439.13970E-03	58 5440.16760E-03	58 6409.30240E-02	58 6429.60220E-02
58 8428.65940E-00	58 9409.45850E-01	58 9429.97120E-01	58 9449.44430E-02
58 9450.18290E-01	58 9451.59020E-01	58 9495.77730E-01	59 122.19990E 00
59 124.17120E 00	59 151.21780E 00	59 152.61340E-01	59 204.27200E-03
59 534.54500E-01	59 535.11040E-01	59 1452.66690E-02	59 1453.81420E-02
59 6409.20280E-02	59 6429.13880E-01	59 9429.38810E-01	59 9495.45890E-01
60 122.76990E-01	60 124.26040E 00	60 151.85720E-01	60 152.52840E-01
60 203.56800E-03	60 204.37600E-03	60 534.12915E+00	60 535.38400E-01
60 536.23310E-01	60 1442.99840E-02	60 1443.71130E-02	60 1452.62340E-02
60 1453.14730E-01	60 6409.19030E-01	60 6429.42650E-01	60 8428.14820E-00
60 9409.14080E 00	60 9429.15330E 00	61 63.34140E 00	61 64.29300E-01
61 121.68170E 00	61 122.12250E 01	61 123.99470E 00	61 124.58830E 00

1	2	3	4	5	6	7	8
61	202.11960E-03	61	203.12900E-03	61	206.76000E-03	61	207.81600E 01
61	362.67280E-02	61	423.20130E-03	61	473.25120E-03	61	481.25530E-03
61	483.26560E-03	61	536.31620E-02	61	1300.38090E 00	61	1301.20240E-02
61	1302.39130E-02	61	1303.26740E-02	61	1313.96720E-03	61	1314.10540E-01
61	1315.33960E-01	61	1316.25300E-02	61	1318.11060E-01	61	1319.30400E-01
61	1320.25450E-02	61	1321.82130E-03	61	1441.65210E-02	61	1442.14950E-01
61	1443.57050E-01	61	1445.15070E 00	61	1447.73490E-02	61	1449.17080E-01
61	1453.45320E-02	61	2406.41700E 00	61	2407.20780E 00	61	2408.14540E 00
61	2424.30700E-02	61	2425.24460E-01	61	2426.12460E-01	61	2427.28160E-01
61	2428.77140E-02	61	2454.64160E-02	61	2455.30630E-02	61	2456.80720E-02
61	2457.43440E-02	61	3407.10490E 00	61	3426.21310E-01	61	3453.10160E-02
61	3455.59850E-02	61	5407.23440E-01	61	5408.84390E-03	61	5438.66080E-03
61	5439.43940E-03	61	5440.38880E-03	61	5453.88910E-04	61	5455.25110E-03
61	5456.20570E-03	61	5457.18850E-03	61	5473.20340E-03	61	9424.24950E-01
61	9428.16920E-00	61	9447.14310E-01	61	9448.43430E-01	61	9449.11420E 00
61	9450.90730E-01	61	9451.45970E-01	62	202.57900E-03	62	203.62100E-03
62	6413.49740E 00	62	6429.86020E-02	62	6471.63690E-02	62	9413.10420E 01
62	9414.10640E 01	62	9415.99760E 00	63	64.12070E 00	63	121.48800E 00
63	123.80010E 00	63	143.26500E 00	63	144.26420E 00	63	201.13430E-03
63	202.14600E-04	63	205.85200E 01	63	206.93000E-04	63	361.44270E-02
63	362.34590E-01	63	363.36330E-02	63	364.40590E-02	63	365.74060E-02
63	370.80930E-02	63	393.39000E-02	63	401.52540E-03	63	403.31910E-02
63	404.22510E-01	63	405.38870E-02	63	423.49720E-03	63	472.29890E-01
63	473.11320E-02	63	480.26690E-03	63	481.18910E-02	63	482.92000E-03
63	483.21660E-02	63	511.31690E-01	63	512.15550E-02	63	540.48100E-01
63	562.66760E-02	63	1304.45640E-02	63	1306.56740E-01	63	1307.15660E-01
63	1311.19180E-03	63	1312.18760E-03	63	1314.12270E-01	63	1315.33330E-01
63	1316.28970E-02	63	1318.83850E-03	63	1401.12820E-01	63	1494.52440E-02
63	2406.54240E-01	63	2424.26940E-02	63	2425.57700E-02	63	2452.38820E-02
63	2473.19860E-01	63	3453.69460E-03	63	5473.73730E-03	63	6402.31380E-02
63	8424.18500E-00	63	9447.12330E-01	63	9448.21370E-01	63	9449.47710E-02
63	9511.10740E-01	64	121.27680E 00	64	123.27000E 00	64	138.53580E-01
64	143.31360E 00	64	144.13770E 00	64	201.64750E-03	64	202.70300E-04
64	361.72000E-02	64	362.18020E-01	64	363.67850E-02	64	364.80540E-02
64	365.25420E-01	64	370.24460E-01	64	393.12900E-01	64	401.14300E-02
64	402.21570E-01	64	403.17490E-01	64	404.28750E-01	64	405.62770E-02
64	423.17010E-02	64	472.14310E-01	64	473.81210E-03	64	480.24690E-03
64	481.12320E-02	64	482.92000E-03	64	483.22470E-02	64	484.13400E-02
64	511.58270E-01	64	512.10280E-01	64	540.49610E-01	64	562.43720E-01
64	1307.99520E-02	64	1314.81380E-02	64	1401.20970E-01	64	1494.50080E-02
64	2406.17050E-01	64	2424.72160E-03	64	2473.16240E-01	64	5473.54790E-03
64	6402.14980E-01	64	6435.11610E-01	64	6471.24790E-01	64	8424.12240E-00
64	9447.51710E-02	64	9511.44330E-01	70	196.80500E-04	70	200.10840E-04
70	430.44920E-02	70	431.51390E-02	70	441.23890E-01	70	442.14500E-01
70	458.25680E-01	70	459.20650E-01	70	495.62730E-01	70	514.45070E-02
70	515.28810E-02	70	516.75090E-02	70	616.77910E-02	70	4495.13200E 00
72	77.13400E-02	72	193.46440E-05	72	194.10840E-04	72	462.57160E-03
72	463.74730E-02	72	464.43150E-03	72	475.59150E-03	72	510.99750E-02
72	513.22530E-02	72	4510.34400E-01	73	75.21540E-02	73	76.16110E-01
73	194.58820E-03	73	195.63160E-03	73	198.62850E-03	73	199.67650E-03
73	402.76410E-03	73	410.58760E 00	73	411.73630E 00	73	412.62440E 00
73	423.33550E-03	73	431.11590E-01	73	432.55520E 00	73	433.62060E 00

1	2	3	4	5	6	7	8
73 434.57120E 00	73 435.23500E-01	73 442.10170E-01	73 443.43220E 00				
73 446.48780E 00	73 445.44810E 00	73 446.19560E-01	73 459.18320E-01				
73 460.59020E 00	73 461.67150E 00	73 462.64130E 00	73 463.25570E-01				
73 475.42800E-04	73 511.13200E-02	73 512.13370E-02	73 513.24850E-03				
73 4402.27110E-01	73 4409.40910E-01	73 4413.32120E 00	73 4429.45590E-02				
73 4435.18380E-01	73 4474.28670E 00	73 4511.79930E-02	75 76.10770E-02				
75 198.13930E-04	75 402.20840E-02	75 412.51650E-02	75 423.44670E-03				
75 434.21440E-02	75 435.48260E-02	75 511.81840E-02	75 512.19590E-02				
75 4435.13970E-02	75 4511.20740E-01	76 77.42530E-02	76 193.12380E-04				
76 194.43340E-04	76 197.10840E-04	76 198.41800E-04	76 402.69030E-03				
76 412.25190E-02	76 423.21830E-03	76 434.20200E-01	76 435.70380E-01				
76 445.17210E-01	76 446.72320E-01	76 462.68360E-02	76 463.35180E-01				
76 511.21980E-02	76 512.11910E-02	76 4435.56770E-01	76 4511.51800E-02				
77 193.27860E-03	77 194.32510E-04	77 446.23990E-02	77 463.98140E-01				
77 464.60580E 00	77 475.19000E-03	77 510.20330E-02	77 513.12080E-02				
77 4435.15770E-02	77 4465.26020E-01	77 4471.12040E 00	77 4474.13030E 00				
77 4510.66780E-02	121 122.24860E 00	121 123.13060E 01	121 124.10290E 00				
121 138.25890E-01	121 143.64600E 00	121 144.47770E 00	121 362.11660E-01				
121 401.11650E-03	121 403.18460E-02	121 404.61830E-02	121 423.11660E-03				
121 465 .1683E-01	121 466.17480E-03	121 467.37920E-04	121 468.13920E-03				
121 469.50450E-03	121 470.15950E-02	121 472.92560E-02	121 473.26950E-03				
121 474.64170E-01	121 480.79630E-04	121 481.44420E-03	121 483.74980E-03				
121 494.76950E-02	121 528.12510E 00	121 529.13040E 00	121 530.19280E 00				
121 532.92300E-01	121 566.26910E-03	121 1300.42350E-01	121 1303.14280E-03				
121 1305.20340E-01	121 1307.35540E-02	121 1308.65870E-04	121 1309.77190E-04				
121 1310.79220E-04	121 1313.19420E-03	121 1314.50210E-02	121 1317.23620E-01				
121 1318.20690E-02	121 1321.89690E-02	121 1401.72760E-02	121 1449.14540E-01				
121 1494.28960E-01	121 2406.64260E-01	121 2407.18150E-01	121 2424.38910E-02				
121 2425.15050E-01	121 2426.33420E-02	121 2452.57520E-01	121 2454.44200E-01				
121 2455.11190E-01	121 2473.28460E-01	121 2474.11560E 00	121 2476.36730E-01				
121 2477.91950E-02	121 3407.52770E-02	121 3426.22310E-02	121 3453.11280E-01				
121 3455.25740E-02	121 3477.22660E-02	121 5407.15290E-02	121 5438.19730E-03				
121 5452.14250E-02	121 5455.47760E-03	121 5473.19150E-03	121 5474.29370E-02				
121 5476.29430E-02	121 5477.18240E-03	121 6402.24650E-02	121 6435.44360E-02				
121 6465.45720E-02	121 6474.34400E 00	121 8424.91620E-01	121 8452.24010E+01				
121 8454.24130E+01	121 9447.51590E-02	121 9448.15070E-01	121 9449.55670E-02				
121 9474.61000E-01	121 9476.15070E 00	121 9510.26690E 00	122 124.13370E 01				
122 138.28170E 01	122 151.80660E 00	122 152.50030E 00	122 527.67700E 00				
122 530.17920E 00	122 531.21350E 00	122 537.91790E-01	122 538.28350E 00				
122 1300.54780E-01	122 1301.32770E-03	122 1302.20050E-03	122 1303.66790E-03				
122 1313.74130E-03	122 1318.75140E-03	122 1321.19660E-02	122 1440.65850E-01				
122 1441.65850E-01	122 1442.12560E-01	122 1443.12800E-01	122 1448.15600E-01				
122 1449.24260E-01	122 1450.60130E-01	122 1451.63300E-01	122 1452.12810E-01				
122 1453.16600E-01	122 1458.69320E-02	122 1459.14520E-01	122 2406.24210E-01				
122 2407.16070E-01	122 2408.23440E-01	122 2425.32870E-02	122 2426.22100E-02				
122 2427.12320E-01	122 2428.87850E-02	122 2454.23900E-02	122 2455.53250E-02				
122 2456.36290E-01	122 2457.35870E-01	122 2477.29850E-02	122 2478.23600E-01				
122 2479.39140E-01	122 3407.12460E-01	122 3426.66950E-02	122 3455.24480E-01				
122 3477.24270E-01	122 3478.94700E-02	122 5407.20790E-02	122 5408.18550E-03				
122 5438.25540E-03	122 5439.40510E-03	122 5440.41560E-03	122 5455.78370E-03				
122 5456.11940E-02	122 5457.11980E-02	122 5477.28480E-02	122 5479.27940E-02				
122 6409.59980E-02	122 6474.36720E 00	122 8428.13240E-00	122 8454.26730E+01				

1	2	3	4	5	6	7	8
122	8457.17720E+01	122	9449.68590E-02	122	9450.83320E-02	122	9451.88550E-02
122	9477.19050E-01	122	9478.31750E 00	122	9479.67900E-01	122	9495.38110E 00
123	124.25390E 00	123	138.27830E 01	123	143.36170E 00	123	144.11290E 01
123	361.34890E-02	123	362.47910E-01	123	363.20050E-02	123	370.27800E-02
123	393.15170E-02	123	401.29080E-03	123	403.25310E-02	123	404.91240E-02
123	405.15250E-02	123	423.15440E-03	123	466.35380E-04	123	467.10760E-04
123	468.63720E-04	123	470.14840E-02	123	472.60770E-01	123	473.97610E-03
123	480.36780E-03	123	481.23260E-02	123	483.22540E-02	123	494.19230E-02
123	540.46260E-01	123	562.53950E-02	123	1300.14640E 00	123	1301.14420E-02
123	1302.63300E-03	123	1303.40190E-03	123	1304.63480E-01	123	1305.37500E-01
123	1306.24640E-02	123	1307.33350E-02	123	1308.67290E-03	123	1309.33530E-03
123	1310.28000E-03	123	1311.25720E-03	123	1312.44450E-03	123	1313.13010E-02
123	1314.66970E-02	123	1315.21060E-02	123	1316.58290E-01	123	1317.41550E-01
123	1318.30200E-02	123	1319.80020E-03	123	1320.25200E-01	123	1321.16920E-01
123	1322.84260E-03	123	1401.11370E-01	123	1449.21430E-01	123	1494.10760E-01
123	2406.10580E 00	123	2407.52270E-01	123	2408.11950E-01	123	2424.12590E-01
123	2425.51080E-01	123	2426.14140E-01	123	2427.45300E-02	123	2452.50430E-01
123	2454.42150E-01	123	2455.10350E-01	123	2456.23950E-02	123	2473.50310E-01
123	3407.16660E-01	123	3426.94200E-02	123	3453.11540E-01	123	3455.66260E-02
123	5407.54690E-02	123	5408.73190E-04	123	5438.63550E-03	123	5439.63800E-04
123	5453.13920E-02	123	5455.56830E-03	123	5473.60350E-03	123	6402.30000E-02
123	8424.25350E-00	123	8452.76430E-00	123	9447.14460E-01	123	9448.43520E-01
123	9449.19470E-01	123	9450.54540E-02	123	9511.64250E-02	124	138.29350E 01
124	151.55810E 00	124	152.11510E 01	124	534.16330E-01	124	535.27500E-01
124	536.80500E-01	124	1300.20490E 00	124	1301.13770E-02	124	1302.12930E-02
124	1303.11520E-02	124	1313.19350E-02	124	1318.14780E-02	124	1321.17050E-02
124	1440.20210E 00	124	1441.20400E 00	124	1442.19750E-01	124	1443.23760E-01
124	1444.65810E-02	124	1446.15710E 00	124	1447.15510E 00	124	1448.88840E-01
124	1449.19240E 00	124	1450.18330E 00	124	1451.19720E 00	124	1452.97150E-02
124	1453.18800E-01	124	1454.65350E-02	124	1455.65410E-02	124	1456.15740E 00
124	1457.15710E 00	124	1458.67360E-01	124	1459.66340E-01	124	2406.10230E 00
124	2407.67130E-01	124	2408.15540E 00	124	2424.11620E-02	124	2425.16170E-01
124	2426.14700E-01	124	2427.76030E-01	124	2428.55500E-01	124	2454.86150E-02
124	2455.56120E-02	124	2456.44460E-01	124	2457.45590E-01	124	3407.83810E-01
124	3426.39520E-01	124	3453.74400E-03	124	3455.26670E-01	124	5407.14350E-01
124	5408.13550E-02	124	5438.11510E-02	124	5439.18910E-02	124	5440.19430E-02
124	5453.61930E-04	124	5455.95540E-03	124	5456.15550E-02	124	5457.15610E-02
124	6409.54040E-02	124	6429.43860E-02	124	8428.70930E-00	124	8457.24670E-00
124	9409.42580E-01	124	9429.30320E-01	124	9447.19470E-02	124	9448.15520E-01
124	9449.42370E-01	124	9450.57670E-01	124	9451.65300E-01	124	9495.18200E 00
138	143.17320E 01	138	144.68840E 00	138	151.12880E 01	138	152.50060E 00
138	361.22110E-02	138	363.31200E-02	138	465.22340E-02	138	466.11410E-03
138	467.23560E-04	138	468.12370E-03	138	469.76910E-04	138	470.15210E-02
138	473.23720E-03	138	494.38150E-02	138	527.91700E-01	138	528.20510E-01
138	529.18660E-01	138	530.52000E 00	138	531.29600E-01	138	532.14560E-01
138	537.90880E-02	138	538.32700E-01	138	540.24210E-01	138	566.28380E-03
138	1300.24620E-01	138	1301.27290E-03	138	1307.46210E-02	138	1308.19570E-03
138	1309.20980E-03	138	1310.41100E-03	138	1311.56000E-03	138	1312.54390E-03
138	1316.49450E-02	138	1320.31260E-02	138	1322.38190E-03	138	1401.44700E-01
138	1446.21380E-01	138	1447.21150E-01	138	1449.86830E-02	138	1456.20780E-01
138	1457.21200E-01	138	1494.73090E-02	138	2474.77720E-02	138	2478.11180E-02
138	5479.14560E-03	138	6465.20650E-01	138	6474.19760E 00	138	8428.71950E-01

1	2	3	4	5	6	7	8
138 9478.58270E-01	138 9479.49940E-01	138 9495.11070E 00	138 9510.27260E-01
143 144.87240E-01	143 361.17050E-01	143 362.13910E-01	143 363.93610E-02
143 364.83030E-02	143 365.13610E-02	143 370.25090E-02	143 393.14630E-02
143 401.40380E-03	143 402.56690E-02	143 403.39670E-02	143 404.11620E-01
143 405.19370E-02	143 423.27320E-03	143 465.10100E-00	143 466.98500E-03
143 467.26340E-03	143 468.12800E-02	143 469.10740E-02	143 470.16210E-02
143 472.14560E-01	143 473.62180E-03	143 480.14620E-03	143 481.10230E-02
143 482.92000E-03	143 483.10890E-02	143 484.13400E-02	143 494.39180E-01
143 512.11810E-02	143 540.80630E-01	143 562.30990E-02	143 566.98160E-03
143 1305.29230E-02	143 1307.10490E-01	143 1308.10630E-03	143 1309.25530E-03
143 1310.41240E-03	143 1311.23740E-03	143 1312.10030E-03	143 1314.35140E-02
143 1322.92300E-04	143 1401.41940E-02	143 1494.58730E-02	143 2473.10160E-01
143 5473.20470E-03	143 6402.52720E-02	143 6435.11810E-01	143 6465.33710E-01
143 6471.19150E-01	143 8424.91010E-01	143 8452.22760E-00	143 9447.22570E-02
143 9511.65280E-02	144 361.59290E-02	144 362.12690E-01	144 363.15260E-02
144 401.29270E-03	144 403.29340E-02	144 404.84390E-02	144 423.12050E-03
144 465 .6931E-02	144 466.16260E-03	144 467.57940E-04	144 468.40900E-03
144 469.22660E-03	144 470.16080E-02	144 472.20060E-01	144 473.45950E-03
144 480.11330E-03	144 481.13150E-02	144 483.13400E-04	144 494.10500E-01
144 540.26720E-01	144 566.17660E-03	144 1305.67010E-02	144 1307.31360E-02
144 1308.21090E-02	144 1309.22720E-02	144 1310.26230E-02	144 1311.23190E-02
144 1312.22910E-02	144 1314.13810E-02	144 1317.19200E-02	144 1322.24880E-02
144 1494.36610E-02	144 2424.83130E-03	144 2452.96130E-02	144 2473.16280E-01
144 3453.55880E-03	144 5453.81220E-04	144 5473.17560E-03	144 6402.17890E-02
144 8424.11320E-00	144 8452.42230E-00	144 9447.21670E-02	144 9511.57130E-02
151 534.13010E-01	151 535.64300E-02	151 1440.79140E-02	151 1441.65380E-02
151 1442.10900E-01	151 1443.75250E-02	151 1448.13180E-01	151 1450.11360E-01
151 1451.10750E-01	151 1452.22850E-01	151 1453.28610E-01	151 1458.14380E-01
151 6409.73340E-02	151 6429.10060E-01	151 8428.20030E-00	151 8457.10790E-00
151 9409.25540E-01	151 9429.25380E-01	151 9451.82270E-02	151 9495.39940E 00
152 534.81900E-02	152 1303.16660E-03	152 1313.18340E-03	152 1440.10830E-01
152 1441.82570E-02	152 1442.43910E-02	152 1448.88340E-02	152 1450.29880E-01
152 1451.19730E-01	152 1452.12070E-01	152 1453.10680E-01	152 1458.11040E 00
152 2428.48150E-02	152 2457.36780E-02	152 5439.86830E-04	152 5440.99950E-04
152 5456.68720E-04	152 5457.76100E-04	152 6409.22780E-02	152 8428.26910E-00
152 8457.12820E-00	152 9409.29010E-01	152 9450.45560E-02	152 9451.14720E-01
152 9495.14270E 00	361 362.45690E-02	361 363.90220E-02	361 364.45690E-02
361 365.90220E-02	361 375.90220E-02	361 376.90220E-02	361 377.23740E 00
361 381.22840E-03	361 382.22840E-03	361 540.80270E-02	362 363.27420E-01
362 363.16170E-02	362 364.91550E-02	362 365.27420E-01	362 375.30530E-01
362 376.30530E-01	362 377.53330E 00	362 381.10530E-01	362 382.10530E-01
362 473.15250E-03	362 480.23900E-03	362 481.86250E-03	362 483.13500E-04
362 540.27500E-01	362 1020.24840E-01	362 1021.82660E-02	362 1314.15880E-02
362 5473.11390E-03	362 8424.30600E-01	363 364.15680E-02	363 364.27420E-01
363 375.20840E 00	363 381.44890E-02	363 382.44890E-02	363 540.17050E-01
364 365.27420E-01	364 375.30530E-01	364 376.30530E-01	364 377.53330E 00
364 381.10530E-01	364 382.10530E-01	364 480.25800E-03	364 482.92000E-03
364 484.13400E-02	364 540.25720E-01	364 1020.24840E-01	364 1021.82660E-02
364 6435.63060E-02	365 370.71320E-02	365 376.20840E 00	365 381.44890E-02
365 382.44890E-02	365 393.82200E-03	365 9511.33980E-02	370 393.21120E-02
370 9511.16290E-02	375 376.27240E-03	375 377.24830E 00	375 381.68440E-02
375 382.68440E-02	375 1020.10360E-01	375 1021.34670E-02	376 377.24830E 00

1	2	3	4	5	6	7	8
376	381.68440E-02	376	382.68440E-02	376	1020.10360E-01	376	1021.34670E-02
377	1020.23740E 00	381	480.19110E-01	381	481.28090E-01	381	483.17780E-01
381	1020.55560E-01	382	480.23550E-01	382	482.65700E-01	382	483.30160E-01
382	484.55460E-01	382	1020.55560E-01	401	406.71420E-02	401	412.37580E-02
401	413.78160E-02	401	416.62570E-02	401	511.72030E-03	401	543.36330E-02
401	562.29890E-03	402	405.35950E-02	402	406.27580E-01	402	412.41240E-03
402	412.54600E-01	402	413.45290E-01	402	416.40360E-01	402	423.41730E-03
402	511.41300E-01	402	511.87380E-02	402	512.72870E-02	402	512.14700E-02
402	543.33790E-01	402	562.46220E-01	402	4435.33320E-03	402	4511.10980E-01
402	9511.12650E-01	403	406.10760E-01	403	412.52480E-02	403	413.11470E-01
403	416.74740E-02	403	511.17740E-02	403	543.62730E-02	404	406.13580E-01
404	412.38680E-02	404	413.13800E-01	404	416.12770E-01	404	511.11960E-01
404	543.60360E-02	405	406.18350E-01	405	412.10960E-01	405	413.13480E-01
405	416.20940E-01	405	511.53180E-01	405	543.88900E-02	406	411.36930E-01
406	412.77720E-01	406	413.19680E 00	406	414.21410E-01	406	416.21460E 00
406	417.20750E-01	406	543.19530E 00	406	2406.58060E 00	406	2425.22700E-01
407	410.26130E-01	407	411.23980E 00	407	414.24530E 00	407	415.22260E-01
407	416.21610E-01	407	417.24710E 00	407	418.22880E-01	407	533.12440E-01
407	543.28110E-01	407	2407.25060E 00	407	2426.09340E-01	407	2427.23470E-03
407	3407.38860E 00	407	3426.14270E-01	408	409.10200E-01	408	410.15040E 00
408	411.41540E-01	408	414.22540E-01	408	415.18780E 00	408	417.22650E-01
408	418.19380E 00	408	533.51950E-01	408	563.10610E 00	408	2408.61900E 00
408	2427.22800E-01	408	3426.18270E-03	409	410.69470E-01	409	415.37010E-01
409	418.38520E-01	409	517.12820E-01	409	518.10320E 00	409	563.15460E 00
409	9409.83000E-00	410	411.11900E-01	410	412.12050E-01	410	415.14170E 00
410	418.14580E 00	410	432.88970E-02	410	433.98850E-02	410	434.89750E-02
410	443.68460E-02	410	444.77100E-02	410	445.70780E-02	410	460.92970E-02
410	461.10560E-01	410	462.10090E-01	410	518.35910E-02	410	533.16080E 00
410	563.79110E-01	410	4402.68050E-03	410	4409.30410E-01	410	4413.80070E-01
411	412.12620E-01	411	414.23990E 00	411	415.22190E-01	411	416.21140E-01
411	417.24170E 00	411	418.22810E-01	411	432.10930E-01	411	433.12230E-01
411	434.11250E-01	411	443.85120E-02	411	444.96080E-02	411	445.88260E-02
411	460.11620E-01	411	461.13220E-01	411	462.12630E-01	411	4402.72470E-03
411	4409.11050E-02	411	4413.16770E-01	411	4474.57210E-02	412	413.77810E-01
412	416.13180E 00	412	432.92690E-02	412	433.10490E-01	412	434.97410E-02
412	435.70460E-03	412	443.72500E-02	412	444.81910E-02	412	445.75710E-02
412	446.49440E-03	412	460.98670E-02	412	461.11220E-01	412	462.10740E-01
412	512.56910E-03	412	543.42730E 00	412	4402.20780E-01	412	4409.96380E-03
412	4413.80510E-01	412	4435.18440E-02	412	4474.54050E-02	412	4511.21060E-02
413	416.16190E 00	413	417.29340E-01	413	543.36980E 00	413	9413.18325E+01
414	416.48690E-01	414	417.34870E 00	414	418.51640E-01	414	533.84070E-02
414	9414.19105E-01	415	417.50410E-01	415	418.26440E 00	415	517.58310E-02
415	533.56550E-01	415	563.12340E 00	415	9415.17280E+01	416	485.91840E 00
416	485.79100E 00	416	543.27940E 00	417	486.95740E 00	417	486.87500E 00
417	533.84570E-02	417	543.21990E-01	418	487.86600E 00	418	487.84000E 00
418	533.58130E-01	418	563.10960E 00	423	424.19280E-01	423	425.42290E-02
423	434.46880E-04	423	434.55650E-02	423	435.15590E-03	423	435.19750E-01
423	437.20010E-02	423	475.19360E-02	423	476.25810E-02	423	476.42490E-02
423	483.18820E-01	423	483.71720E-02	423	484.18400E-01	423	485.31020E-02
423	488.33940E-02	423	488.29880E-02	423	489.13110E-01	423	489.15230E-01
423	489.14800E 00	423	511.63270E-03	423	511.86250E-03	423	512.36850E-03
423	519.25840E-01	423	520.28820E-02	423	523.35400E-02	423	523.49070E-02

B_{N-M} RADIATION EXCHANGE FACTORS - FT^2

1	2	3	4	5	6	7	8
423	576.23920E-02	423	576.23110E-02	423	2406.13520E-03	423	4413.70110E-04
423	4435.93090E-04	423	4511.17470E-02	423	9511.17830E-03	424	425.35260E-02
424	481.50760E-02	424	483.39940E-01	424	485.46450E-02	424	488.21680E-01
424	489.24490E-01	424	520.23900E-02	424	523.16380E-01	424	576.66140E-02
424	2424.62740E-01	424	2425.45060E-02	424	8424.29240E-01	425	437.19370E-01
425	480.10230E-02	425	481.63090E-02	425	483.12110E-01	425	485.14540E 00
425	488.12350E-01	425	489.76060E-02	425	520.38380E-02	425	523.35140E 00
425	576.91250E-01	425	577.19720E-01	425	2424.36620E-02	425	2425.39060E 00
426	430.17050E-01	426	486.16180E 00	426	523.31620E-01	426	525.21150E-02
426	570.28820E-02	426	576.13280E-01	426	578.33250E 00	426	579.81590E-01
426	2426.16220E 00	426	2427.49930E-02	426	3426.24820E 00	427	429.24460E-01
427	431.24830E-01	427	432.13590E 00	427	442.10760E-01	427	443.44730E-01
427	487.19440E 00	427	526.41420E-01	427	572.11630E-02	427	574.76520E-01
427	575.24230E-01	427	578.49650E-01	427	579.18960E-01	427	580.13900E-01
427	2427.39620E 00	427	3426.37960E-02	428	429.13850E 00	428	430.14580E-01
428	431.22120E-01	428	432.24770E-01	428	441.14400E-01	428	442.15430E-01
428	443.88920E-02	428	487.18890E-01	428	557.54590E-01	428	558.77420E-01
428	575.63660E-01	428	581.15140E-01	428	2428.20220E 00	428	8428.73570E-03
429	430.31980E-01	429	431.13350E 00	429	432.22670E-01	429	439.18560E-01
429	440.69100E-01	429	441.41590E-01	429	442.51200E-01	429	443.10400E-01
429	458.56700E-02	429	478.12880E-01	429	479.23720E-01	429	526.10830E-01
429	557.10010E 00	429	558.72540E-01	429	574.29030E-01	429	575.21040E 00
429	581.70150E-02	429	9429.16640E+01	430	431.14740E-01	430	440.14340E-01
430	441.33870E-02	430	442.10830E-01	430	495.60670E-01	430	514.51480E-03
430	516.13320E-02	430	557.39390E-02	430	575.29650E-01	430	4495.56360E-01
431	439.15940E-01	431	440.35160E-01	431	441.14660E-01	431	442.77100E-02
431	442.18650E-01	431	459.25140E-01	431	487.17750E-01	431	515.78010E-03
431	557.85730E-01	431	558.13590E-01	431	575.88460E-01	431	4429.70050E-01
431	4474.52170E-02	431	4495.55350E-02	432	433.36630E-02	432	433.92120E-02
432	434.84790E-02	432	439.70150E-01	432	440.15240E-01	432	443.67480E-02
432	443.64290E-02	432	444.72420E-02	432	445.66530E-02	432	460.88230E-02
432	461.10020E-01	432	462.95630E-02	432	486.55550E-02	432	487.96970E-02
432	487.16280E 00	432	524.29600E-02	432	526.29100E 00	432	526.60420E-01
432	526.34990E-01	432	574.65120E-01	432	575.20050E-01	432	578.27130E-01
432	579.98320E-02	432	4409.28240E-02	432	4429.17410E-02	432	4474.63410E-02
433	434.94780E-02	433	443.71740E-02	433	444.16190E-01	433	444.80970E-02
433	445.74390E-02	433	460.98450E-02	433	461.11190E-01	433	462.10690E-01
433	477.13800E-01	433	486.17170E 00	433	487.53950E-02	433	523.35080E-01
433	524.27060E-01	433	526.32760E-01	433	576.16010E-01	433	578.29920E 00
433	579.10110E 00	433	4402.56060E-03	433	4409.86400E-03	433	4413.95090E-02
433	4474.69540E-02	434	435.35800E-02	434	435.16630E-02	434	443.66010E-02
434	444.74510E-02	434	445.71250E-02	434	445.17490E-01	434	446.14920E-02
434	460.90550E-02	434	461.10300E-01	434	462.99460E-02	434	476.13180E-01
434	480.15290E-02	434	481.16420E-02	434	482.46740E-02	434	483.38560E-02
434	484.10170E-01	434	485.16080E 00	434	488.13100E-01	434	489.39460E-02
434	512.34070E-03	434	519.44000E-01	434	520.58810E-02	434	521.18630E-03
434	522.54300E-03	434	523.26520E 00	434	525.20220E-02	434	576.95760E-01
434	577.25780E-01	434	578.15460E-01	434	4402.11590E-02	434	4413.49930E-02
434	4435.59120E-02	434	4474.60980E-02	434	4511.13900E-02	435	445.12960E-02
435	446.44080E-02	435	462.83850E-03	435	463.19690E-02	435	481.91580E-03
435	482.36360E-02	435	483.38000E-02	435	484.34660E-01	435	485.49860E-02
435	488.21280E-01	435	489.81330E-02	435	511.99400E-03	435	512.84810E-03

1		2		3		4		5		6		7		8	
435	519.17670E-01	435	520.17120E-02	435	523.13650E-01	435	576.78690E-02
435	577.33100E-02	435	4413.77280E-03	435	4435.26340E-01	435	4511.29300E-02
436	447.49000E-02	436	476.29630E-02	436	480.26400E-02	436	481.33330E-01
436	483.66090E-02	436	485.29880E-02	436	488.43200E-01	436	489.26790E-02
436	520.44510E-02	436	521.23970E-03	436	523.74700E-02	436	559.34630E-02
436	576.11670E-01	436	577.77420E-02	436	2424.57730E-01	436	2425.31650E-02
436	3453.14560E-02	436	8424.15390E-01	436	9447.55200E-04	437	448.17270E-01
437	454.15790E-01	437	476.20620E-01	437	480.18750E-02	437	481.79660E-02
437	483.62920E-02	437	485.23330E-01	437	488.15840E-01	437	489.22150E-02
437	520.21900E-02	437	523.94120E-01	437	576.23630E 00	437	577.95030E-01
437	2424.28730E-02	437	2425.25990E 00	437	2454.08380E-01	437	9448.24260E-03
438	449.18010E-01	438	477.13990E-01	438	486.25670E-01	438	523.12990E-01
438	524.48700E-01	438	525.22410E-02	438	550.93540E-04	438	553.14520E-01
438	555.69370E-02	438	570.63380E-02	438	576.19970E-01	438	577.13530E-01
438	578.84670E-01	438	578.84670E-01	438	579.17840E 00	438	2426.10800E 00
438	2427.34140E-02	438	2455.30000E-02	438	3426.16560E 00	438	3455.50340E-02
438	9449.25310E-03	439	443.26790E-01	439	450.17550E-01	439	456.13280E-01
439	478.13780E-01	439	487.60520E-01	439	526.24790E-01	439	571.65070E-01
439	572.48410E-02	439	574.30120E-01	439	578.19820E-01	439	578.19820E-01
439	579.33130E-01	439	580.10630E 00	439	581.11160E-01	439	2427.26380E 00
439	2456.08520E-01	439	3426.25780E-02	439	9450.24660E-03	440	441.32150E-01
440	442.29750E-01	440	443.52050E-02	440	451.16150E-01	440	457.13840E-01
440	458.74840E-02	440	479.10850E-01	440	487.12720E-01	440	557.30390E-01
440	558.38230E-01	440	573.67720E-01	440	575.36500E-01	440	581.14030E 00
440	2428.24270E 00	440	2457.78420E-02	440	3428.18930E-03	440	9451.22690E-03
441	442.14530E-01	441	442.15470E-01	441	457.61470E-02	441	458.47460E-02
441	459.39500E-02	441	479.84610E-02	441	479.22270E-02	441	495.12640E 00
441	514.63730E-02	441	515.19600E-02	441	516.32570E-02	441	539.20500E-01
441	557.50110E-02	441	572.81450E-03	441	573.88410E-02	441	573.93290E-02
441	575.36100E-01	441	575.37800E-01	441	581.13040E-01	441	581.82150E-02
441	581.28200E-01	441	616.30170E-02	441	4495.11640E 00	442	459.33930E-01
442	459.10290E-01	442	479.20890E-01	442	487.99160E-02	442	515.53670E-02
442	516.22300E-03	442	539.10390E-01	442	557.35340E-01	442	571.66660E-02
442	572.21970E-02	442	573.61680E-01	442	575.10030E 00	442	575.10400E 00
442	581.43680E-01	442	616.28080E-03	442	4429.13680E-01	442	4474.82770E-02
442	4495.33250E-02	443	444.56410E-02	443	445.51820E-02	443	460.69290E-02
443	460.10120E-01	443	461.78560E-02	443	462.74940E-02	443	478.21860E-01
443	487.35890E-01	443	524.18240E-01	443	526.15310E-01	443	526.25670E-01
443	526.18100E 00	443	570.46040E-02	443	571.54070E-01	443	573.14560E-01
443	574.70800E-01	443	574.77370E-01	443	575.59290E-02	443	578.10060E-01
443	579.24040E-01	443	580.39540E-01	443	581.72380E-02	443	4409.72180E-03
443	4413.49180E-02	443	4474.73110E-02	444	445.58490E-02	444	460.78010E-02
444	461.19230E-01	444	461.88620E-02	444	462.84540E-02	444	477.25060E-01
444	486.32660E-01	444	487.27090E-02	444	523.15560E-01	444	524.10040E 00
444	526.18910E-01	444	576.21630E-01	444	577.16430E-01	444	578.97490E-01
444	579.20870E 00	444	4413.58250E-02	444	4474.80560E-02	445	446.12360E-02
445	460.71570E-02	445	461.81320E-02	445	462.19050E-01	445	462.78540E-02
445	476.25660E-01	445	480.26700E-02	445	481.21260E-02	445	482.59930E-02
445	483.21520E-02	445	484.50970E-02	445	485.24610E-01	445	488.16550E-01
445	507.94650E-03	445	508.84630E-03	445	519.11890E-01	445	520.67570E-02
445	521.54170E-03	445	522.13650E-02	445	523.10190E 00	445	525.19450E-02
445	559.58500E-02	445	576.19510E 00	445	577.97970E-01	445	4402.45200E-03

1		2		3		4		5		6		7		8	
1	2345678901	2	2345678901	3	2345678901	4	2345678901	5	2345678901	6	2345678901	7	2345678901	8	2345678901
445	4413.51390E-02	445	4435.45240E-02	445	4474.69880E-02	446	462.76220E-03								
446	463.20370E-02	446	476.35520E-02	446	480.44180E-02	446	481.27030E-02								
446	482.28770E-01	446	484.48030E-02	446	488.41140E-01	446	507.16930E-02								
446	508.82100E-03	446	519.39720E-02	446	523.89210E-02	446	559.58500E-02								
446	576.12890E-01	446	577.93250E-02	446	4435.22440E-01	446	4474.74890E-03								
447	452.16040E-02	447	453.18850E-01	447	454.27770E-02	447	472.11500E-02								
447	474.56090E-02	447	475.80500E-02	447	476.63180E-02	447	503.13970E-02								
447	504.14530E-02	447	505.13390E-02	447	559.33300E-02	447	577.48830E-02								
447	2424.29920E-02	447	2425.13780E-03	447	3453.49000E-02	447	9447.14790E-01								
448	454.89850E-01	448	475.73440E-02	448	476.63050E-01	448	477.10530E-01								
448	577.57280E-01	448	2424.15600E-03	448	2425.15510E-01	448	2454.17270E-01								
448	9448.65240E-01	449	455.95810E-01	449	476.10380E-01	449	477.49260E-01								
449	524.30840E-01	449	525.28820E-03	449	550.36810E-03	449	552.27630E-01								
449	570.19150E-02	449	577.95800E-02	449	2426.64650E-02	449	2427.19840E-03								
449	2455.95000E-02	449	3426.95920E-02	449	3455.13370E-01	449	9449.68060E-01								
450	456.83930E-01	450	477.65740E-02	450	478.52950E-01	450	479.74820E-02								
450	524.55920E-02	450	551.27180E-02	450	571.49390E-01	450	572.16960E-02								
450	573.97330E-02	450	2427.15680E-01	450	2456.17550E-01	450	3426.15700E-03								
450	9450.66300E-01	451	457.82170E-01	451	458.21770E-01	451	478.85860E-02								
451	479.49410E-01	451	573.69380E-01	451	2428.14150E-01	451	2457.16150E-01								
451	9451.61010E-01	452	466.92980E-02	452	467.26150E-02	452	468.11140E-01								
452	469.11100E-01	452	470.12600E-01	452	471.11000E-02	452	472.13390E-01								
452	473.24920E 00	452	474.25170E 00	452	475.83300E-02	452	494.17980E-01								
452	503.60510E 00	452	504.23380E-02	452	505.53590E-02	452	507.10940E-02								
452	520.14970E-02	452	521.67770E-03	452	522.22110E-02	452	559.09770E-01								
452	2452.59630E 00	452	8452.22620E-02	453	454.50050E-02	453	471.24600E-02								
453	472.68200E-02	453	474.99450E-02	453	475.37510E-01	453	476.10150E-01								
453	480.27670E-02	453	488.18210E-01	453	503.64080E-02	453	504.78630E-02								
453	505.14380E-01	453	507.44130E-02	453	520.15730E-02	453	521.40920E-03								
453	522.14360E-02	453	559.19340E-01	453	576.82630E-02	453	577.29470E-01								
453	2454.55260E-02	453	3453.10210E 00	453	8454.16160E-03	454	472.11850E-02								
454	475.12310E-01	454	476.19200E 00	454	477.16190E-01	454	480.36160E-02								
454	481.61100E-02	454	488.14290E-01	454	504.56120E-02	454	505.10360E-01								
454	507.25860E-02	454	524.23820E-01	454	559.08740E-01	454	576.77620E-01								
454	577.33250E 00	454	2454.45510E 00	454	3453.45110E-02	454	8454.65190E-03								
455	476.14450E-01	455	477.19100E 00	455	524.19690E 00	455	525.18930E-02								
455	550.11740E-02	455	551.10760E-01	455	552.12970E 00	455	553.34380E-01								
455	555.18680E-01	455	570.18240E-02	455	576.15610E-01	455	577.51970E-01								
455	579.37580E-01	455	2455.18920E 00	455	2456.60640E-02	455	3455.28920E 00								
455	8454.67960E-03	456	478.17970E 00	456	479.11180E-01	456	524.31070E-01								
456	551.75730E-02	456	555.12480E-01	456	571.29190E 00	456	572.90510E-02								
456	573.54870E-01	456	579.18080E-01	456	580.47650E-01	456	581.11890E-01								
456	2456.46000E 00	456	3455.45930E-02	456	8454.61480E-03	457	458.72560E-01								
457	478.11990E-01	457	479.15560E 00	457	571.20140E-01	457	573.39140E 00								
457	580.45300E-02	457	581.63610E-01	457	2457.39100E 00	457	8457.96270E-03								
458	459.27910E-01	458	479.37250E-01	458	479.38930E-01	458	495.16380E 00								
458	514.99350E-03	458	515.23870E-03	458	516.45400E-03	458	539.15210E 00								
458	573.76660E-01	458	573.49190E-01	458	575.35000E-01	458	581.10330E-01								
458	616.22850E-02	458	4495.33460E 00	459	478.16530E-01	459	479.13570E 00								
459	515.12500E-03	459	516.30030E-03	459	539.15820E 00	459	570.20870E-02								
459	571.24240E-01	459	572.76200E-02	459	573.25290E 00	459	574.10810E-01								
459	575.10130E 00	459	580.66210E-02	459	581.68900E-01	459	616.49430E-03								

1	2	3	4	5	6	7	8
459	4429.95020E-02	459	4474.75550E-01	459	4495.17890E-01	460	461.12620E-01
460	462.11860E-01	460	477.11480E-01	460	478.17610E 00	460	479.16360E-01
460	524.63780E-01	460	570.14310E-01	460	571.24210E 00	460	573.56480E-01
460	574.81040E-01	460	575.25150E-01	460	579.21900E-01	460	580.52000E-01
460	581.13960E-01	460	4409.77320E-03	460	4413.55190E-02	460	4474.86560E-01
461	462.13260E-01	461	477.17710E 00	461	478.13180E-01	461	486.17940E-01
461	487.17840E-02	461	524.39720E 00	461	526.10070E-01	461	571.17570E-01
461	576.17090E-01	461	577.45590E-01	461	578.26230E-01	461	579.10290E 00
461	580.48650E-02	461	4402.50310E-03	461	4409.75790E-03	461	4413.62160E-02
461	4474.87500E-01	462	475.52560E-02	462	476.17390E 00	462	477.11610E-01
462	480.28510E-02	462	481.19000E-02	462	482.54250E-02	462	483.11680E-02
462	485.13180E-01	462	488.12830E-01	462	505.55210E-02	462	506.27350E-02
462	507.16140E-02	462	508.98110E-03	462	520.48590E-02	462	521.14810E-02
462	522.78300E-02	462	523.26050E-01	462	524.21620E-01	462	525.24910E-02
462	559.18260E-01	462	576.98950E-01	462	577.37390E 00	462	4402.54030E-03
462	4409.72260E-03	462	4413.59150E-02	462	4435.30500E-02	462	4474.75680E-01
463	464.13100E-01	463	475.21310E-01	463	475.16820E-03	463	476.55840E-02
463	480.11220E-01	463	481.93640E-03	463	482.40320E-02	463	488.18160E-01
463	505.18120E-01	463	506.12460E-01	463	507.50400E-02	463	508.31640E-02
463	510.13720E-02	463	513.10200E-02	463	559.62930E-01	463	576.61440E-02
463	577.20180E-01	463	4435.54140E-02	463	4471.49250E-02	463	4474.55720E-02
463	4510.67840E-02	464	465.31050E-01	464	471.22900E 00	464	474.26120E 00
464	503.20210E 00	464	504.31580E-01	464	505.13490E-01	464	506.96410E-02
464	506.12200E 00	464	507.18120E-02	464	508.12000E-02	464	508.16290E-02
464	513.19610E-03	464	546.89600E-01	464	547.21560E-01	464	548.45460E-02
464	559.28650E-01	464	4465.24440E-01	464	4471.12010E 00	464	4474.12190E 00
465	471.10190E-01	465	474.60740E-01	465	503.46420E-01	465	504.35950E-02
465	506.14880E-02	465	507.38600E-03	465	546.20920E-01	465	547.13210E-01
465	548.57620E-01	465	9471.12440E-02	466	467.71800E 00	466	473.49480E-02
466	474.48090E-02	466	503.53190E-02	466	9471.40110E-04	467	468.28400E 01
467	472.11100E 00	467	473.96870E-03	467	474.13610E-02	467	503.30100E-01
467	503.13740E-02	468	473.30930E-02	468	474.56470E-02	468	503.12410E-01
469	473.58420E-02	469	474.33460E-02	469	503.12360E-01	469	1494.14650E-03
470	473.90190E-02	470	474.93050E-02	470	503.19570E-01	470	1494.15590E-02
471	474.31680E 00	471	474.57630E-02	471	475.37590E-02	471	476.11310E-02
471	503.21300E 00	471	504.31820E-01	471	504.67630E-02	471	505.21890E-02
471	506.75710E-02	471	507.66300E-02	471	507.52060E-02	471	508.93850E-02
471	508.25100E-01	471	521.13220E-03	471	546.18390E 00	471	547.29230E-01
471	548.19210E-01	471	559.29820E-01	471	559.19220E-01	471	9471.38700E-01
472	473.22390E-03	472	473.75820E-02	472	474.26240E-02	472	475.11220E-02
472	480.38090E-03	472	503.26940E 00	472	503.20150E-02	472	503.27300E 00
472	540.32440E-01	472	8424.25590E-01	472	9471.22980E-01	473	474.15080E 00
473	475.88590E-02	473	494.89550E-02	473	503.22020E 00	473	522.49150E-03
473	2473.46220E 00	474	494.92690E-02	474	503.24480E 00	474	503.21060E 00
474	504.30300E-01	474	504.15460E-01	474	505.92000E-02	474	505.16620E-01
474	505.12490E-01	474	506.20330E-01	474	507.10340E-02	474	507.35660E-03
474	508.75960E-03	474	522.11400E-02	474	546.41270E-01	474	547.80670E-01
474	548.69670E-02	474	559.15840E-01	474	559.17150E-01		
474	2474.73310E 00	474	9474.46040E-01	475	480.11860E-02	475	481.38860E-02
475	485.70140E-02	475	488.54890E-02	475	504.84340E-02	475	505.10500E-01
475	505.27900E-01	475	505.17730E-01	475	506.25900E 00	475	506.16810E-01
475	510.88290E-03	475	513.34830E-03	475	522.78740E-03	475	522.64650E-02

B_{N-M} RADIATION EXCHANGE FACTORS - FT^2

1	2	3	4	5	6	7	8
1234567890	1234567890	1234567890	1234567890	1234567890	1234567890	1234567890	1234567890
475 [illegible]	475 559.25030E-01	475	576.44950E-02	475	577.12070E-01		
475 [illegible]	475 4510.32630E-02	476	480.28650E-02	476	481.16910E-02		
476 [illegible]	476 482.73890E-02	476	483.12170E-02	476	483.74130E-02		
476 [illegible]	476 485.28160E-01	476	485.30600E-01	476	486.14090E-01		
476 [illegible]	476 498.04310E-02	476	504.25470E-02	476	506.25190E-02		
476 520.30970E-02	476 520.17470E-02	476	521.90850E-03	476	522.45130E-02		
476 [illegible]	476 523.14110E-01	476	525.16150E-02	476	559.13910E-01		
476 [illegible]	476 576.20940E-01	476	576.33430E-01	476	577.20070E 00		
476 [illegible]	476 9476.23140E 00			476	9476.56060E-01		
477 [illegible]	477 485.11680E-01	477	486.20660E-01	477	486.34910E-01		
477 [illegible]	477 524.17870E 00	477	524.16180E 00	477	525.16230E-02		
477 [illegible]	477 550.77990E-03	477	551.52240E-02	477	552.71080E-01		
477 553.30160E-01	477 555.17270E-01	477	570.57440E-02	477	574.13590E-01		
477 [illegible]	477 577.10100E-01	477	578.14380E-01	477	579.15730E-01		
477 [illegible]	477 2477.66060E-01						
477 3477.17530E 00	477 9477.58420E-01	478	487.27350E-01	478	524.19000E-01		
478 [illegible]	478 551.71040E-02	478	555.81490E-02	478	570.54530E-02		
478 [illegible]	478 571.14260E 00	478	571.14530E 00	478	572.12570E-02		
478 [illegible]	478 573.22080E-01	478	573.27140E-01	478	574.87410E-01		
478 [illegible]	478 [illegible]	478	580.11930E-01	478	581.68910E-02		
478 [illegible]				478	3478.08520E 00		
478 9478.26410E 00	479 497.11290E-01	479	539.13630E 00	479	558.79550E-02		
479 [illegible]	479 572.53420E-02	479	573.17050E 00	479	573.17330E 00		
479 574.20810E-01	479 575.11500E 00	479	581.14540E-01	479	581.19250E-01		
	479 9479.22330E 00	479	9479.14060E+01	480	485.21720E-02		
480 [illegible]	480 490.97620E-02	480	488.12300E-01	480	507.19950E-02		
480 [illegible]	480 521.48250E-03	480	523.18100E-02	480	540.30850E-03		
480 [illegible]	480 559.19000E-02	480	576.30680E-02	480	576.89420E-03		
480 [illegible]	480 577.34980E-02	480	9471.98420E-04	481	485.11610E-02		
481 [illegible]	481 488.38300E-01	481	488.10830E-01	481	520.77720E-02		
481 [illegible]	481 523.66600E-03	481	523.59470E-02	481	540.33620E-03		
481 [illegible]	481 576.73100E-02	481	576.75600E-03	481	577.77850E-03		
481 [illegible]	481 1020.17780E-01	482	485.52290E-02	482	488.27360E-01		
482 [illegible]	482 523.66550E-02	482	540.92000E-03	482	559.56360E-02		
482 [illegible]	482 577.77010E-02	483	484.12540E-02	483	485.89790E-02		
483 [illegible]	483 488.51000E-02	483	488.19590E-01	483	489.22540E-01		
483 [illegible]	483 519.50260E-02	483	520.68890E-02	483	520.50830E-02		
483 [illegible]	483 523.16450E-02	483	540.13400E-04	483	576.63830E-02		
483 1020.17780E-01	484 485.86890E-02	484	488.14330E-01	484	489.66340E-02		
484 [illegible]	484 520.17030E-02	484	523.10220E-01	484	525.25860E-03		
484 [illegible]	484 576.65870E-02	484	577.42030E-02	484	1020.22220E-01		
485 [illegible]	485 489.20550E-02	485	508.78230E-03	485	519.65510E-01		
485 [illegible]	485 520.18150E-02	485	521.19640E-03	485	522.76330E-03		
485 523.15190E 00	485 523.13940E 00	485	525.15060E-02	485	559.54450E-02		
485 [illegible]	485 576.81370E-01	485	577.16640E-01	485	577.11760E-01		
486 [illegible]	486 523.13690E-01	486	523.16420E-01	486	524.18910E-01		
486 [illegible]	486 526.29200E-01	486	570.26950E-02	486	578.16310E 00		
486 578.16870E 00	486 578.16310E 00	486	579.22810E-01	486	579.34960E-01		
487 [illegible]	487 526.23150E-01	487	526.66870E-01	487	572.12740E-02		
487 574.13590E 00	487 575.50410E-01	487	578.25650E-01	487	578.25650E-01		
487 [illegible]	487 579.26390E-02	487	580.57000E-02	488	508.26790E-02		
488 520.75300E 00	488 520.41960E-02	488	520.16520E-01	488	521.38650E-03		

1	2	3	4	5	6	7	8
488	559.12980E-01	489	519.22580E-01	489	520.42500E 00	489	520.92010E-02
489	523.21690E-02	489	523.20620E-02	494	503.19570E-01	494	566.67920E-04
494	1494.59650E-02	495	514.24680E-01	495	515.14580E-02	495	516.89440E-02
495	616.79020E-02	495	4495.71830E 00	503	504.18110E-01	503	506.48130E-02
503	508.92240E-03	503	546.80010E-01	503	547.18670E-01	503	548.58070E-02
503	559.45350E-02	504	505.14470E-01	504	507.16130E-02	504	522.18920E-02
504	559.36500E-01	505	506.12600E-01	505	506.13080E-01	505	506.12910E-01
505	522.77430E-02	505	559.22070E-01	505	559.16450E-01	505	559.71720E-02
506	559.13760E 00	506	559.09350E-01	506	559.15020E-01	506	577.29370E-02
507	508.12000E-02	507	508.18820E-02	507	508.18530E-02	507	520.40310E-02
507	520.62500E 00	507	521.29300E-01	507	521.69940E-03	507	559.11310E-01
507	559.65050E-02	507	559.42310E-02	508	523.60290E-03	508	559.62780E-02
508	559.14180E-01	508	559.69740E-02	508	576.10730E-02	508	577.12480E-02
510	513.36640E-02	510	9510.67920E-01	510	9510.77030E-03	511	512.33740E-02
511	562.82310E-02	511	4435.74710E-03	511	4511.47550E-01	511	9511.53650E-03
512	562.47020E-02	512	4413.27840E-03	512	4435.59690E-03	512	4474.11160E-03
512	4511.10240E-01	512	9511.27630E-02	513	4471.22230E-03	513	4510.14630E-01
514	515.30420E-03	514	516.68570E-03	514	616.70000E-03	514	4495.11240E-01
515	516.14130E-03	515	4429.72020E-03	515	4474.44470E-03	515	4495.33890E-02
516	616.36670E-03	516	4495.19500E-01	517	563.11600E 00	519	520.63110E-02
519	523.71630E-01	520	521.50580E-03	520	523.27050E-02	520	523.14680E-02
520	559.41450E-02	520	576.30100E-02	520	577.20560E-02	521	559.62310E-03
521	576.19440E-03	521	577.13000E-02	522	559.29580E-02	522	576.60420E-03
522	577.80010E-02	522	577.65300E-01	523	525.47330E-03	523	576.18490E-01
523	576.20360E-01	524	525.10400E 00	524	525.42200E-03	524	526.11480E-01
524	550.34500E-03	524	551.50120E-02	524	552.31720E-01	524	553.50260E-01
524	554.11360E 00	524	570.11570E-01	524	574.11540E-01	524	579.16090E-01
524	579.21360E-01	525	576.37180E-03	525	577.65110E-03	525	578.46170E-03
525	579.87760E-01	525	579.69000E-01	525	579.31890E-03	526	574.53590E-01
526	579.59070E-02	526	578.66390E-01	526	578.72500E-01	526	579.47600E-01
526	579.29900E-01	527	9479.54200E-02	527	9479.66700E 00	528	5474.11150E-03
528	9478.11560E 00	528	9510.14920E-01	529	2476.11350E-02	529	5476.10760E-03
529	9478.12410E 00	529	9510.10760E-01	530	532.14570E 00	530	2477.16560E-02
530	9477.35710E 00	531	3477.14860E-02	531	9477.21110E 00	531	9478.30300E-01
530	9478.11360E 00	534	535.42300E-01	534	9429.31695E+00	535	536.88700E-02
535	9409.17600E-01	535	9429.55500E-01	536	9409.17710E-01	536	9429.45010E-01
537	540.40710E-02	537	9478.61810E-01	538	3478.68430E-03	538	5479.12370E-03
538	9478.23510E 00	538	9479.00110E-01	539	572.77810E-03	539	573.11880E 00
539	575.67600E-01	539	581.12820E-01	540	6435.47140E-02	540	6471.91360E-02
540	9471.11210E 00	546	547.79710E-01	546	548.57150E-01	546	549.12160E-01
547	566.12310E-01	547	569.53910E-02	548	549.55180E-02	550	553.41100E-03
550	577.13440E-03	550	579.12070E-03	551	552.66500E-01	551	570.45650E-02
551	571.59470E-02	552	553.75090E-01	552	570.45220E-02	552	579.12010E-01
553	555.60890E-01	553	570.40820E-02	555	570.10130E-01	557	558.91560E-01
557	575.40620E-01	558	575.45070E-01	559	576.66980E-02	559	577.20120E-01
562	9511.59030E-02	566	1494.54790E-04	566	9471.42050E-04	570	571.16030E-01
570	571.15160E 00	570	574.12090E-01	570	575.19430E-02	570	579.28980E-02
570	580.50300E-01	570	580.29270E-02	571	572.56460E-02	571	572.15600E 00
571	574.68630E-01	571	575.14770E-01	571	580.78540E-02	571	580.68150E-02
571	580.30100E 00	572	573.46830E-02	572	575.69140E-02	572	580.51200E-01
572	580.87410E-03	572	581.89290E-03	573	574.15620E-01	573	575.11400E 00
573	581.12350E-01	573	581.13390E-01	573	581.47100E 00	574	580.36200E 00

B_{N-M} RADIATION EXCHANGE FACTORS - FT^2

1	2	3	4	5	6	7	8	
574	580.67500E-01	575	581.10020E 00	575	581.50100E 00	576	577.20200E-01	988
576	577.18350E-01	578	579.16850E-01	578	579.21330E-01	616	4474.25930E-03	989
616	4495.10880E-01	1020	1021.55560E-01	1300	1301.16640E-02	1300	1302.10390E-02	990
1300	1303.14910E-02	1300	1313.19030E-02	1300	2406.22240E-01	1300	2407.23260E-01	991
1300	2426.29350E-02	1300	5407.23900E-02	1300	5438.14900E-03	1300	9448.55140E-02	992
1300	9449.82360E-02	1302	2407.21070E-03	1303	2407.38690E-03	1314	2406.90960E-02	993
1318	2406.88410E-02	1318	2407.13980E-02	1318	2425.76100E-03	1318	9448.92270E-03	994
1440	9451.45560E-02	1442	5408.15660E-02	1442	9409.61100E-02	1442	9429.74790E-02	995
1443	2408.87810E-02	1443	5408.17090E-03	1443	9429.56200E-02	1448	1459.11710E 00	996
1453	8428.59050E-01	1453	9409.83670E-02	1453	9429.50340E-02	1453	9495.69500E-02	997
2406	2424.83420E-03	2406	2425.49830E-02	2406	9447.19150E-02	2406	9448.85830E-02	998
2407	5407.40000E-01	2408	5408.15000E-01	2424	8424.43720E-02	2424	9447.23870E-02	999
2425	9448.11110E-01	2426	5438.50000E-02	2426	9449.48880E-02	2427	5439.50000E-02	1000
2427	9450.93880E-02	2428	5440.50000E-02	2428	8428.73870E-02	2428	9451.94570E-02	1001
2452	5453.50000E-02	2452	8452.19450E-01	2454	8454.56050E-02	2454	9448.24260E-03	1002
2455	5455.50000E-02	2455	8454.22910E-02	2455	9449.98700E-04	2456	5456.50000E-02	1003
2456	8454.52850E-02	2456	9450.24660E-03	2457	5457.50000E-02	2457	8457.82760E-02	1004
2457	9451.22690E-03	2473	5473.50000E-02	2473	8452.18070E 00	2474	5474.50000E-02	1005
2476	5476.50000E-02	3426	9449.51040E-02	3453	8454.13900E-02	3453	9447.55200E-04	1006
3455	8454.35580E-02	3455	9449.15510E-03	3477	5477.50000E-02	3478	5479.50000E-02	1007
4402	4413.85450E-02	4402	4474.87690E-03	4402	6402.20070E-01	4409	4413.94750E-02	1008
4409	4474.12720E-02	4409	6409.29350E-01	4413	4435.30740E-02	4413	4474.20770E-01	1009
4413	6413.19350E-00	4429	4474.90790E-02	4429	4495.36870E-02	4429	6429.67080E-01	1010
4435	4474.40410E-02	4435	4511.12050E-02	4435	6435.51980E-01	4465	4471.79580E-02	1011
4465	4474.80210E-02	4465	6465.21370E-01	4471	4474.43350E-01	4471	6471.99820E-01	1012
4470	6474.36110E-00	4495	9495.54980E-00	4510	9510.71280E-01	4511	9511.49890E-01	1013
6409	6429.50490E-02	6413	9413.12770E-01	6413	9414.13290E-01	6435	6471.97810E-02	1014
9409	9429.79170E-01	9413	9414.27620E-01	9413	9415.25420E-01	9414	9415.26440E-01	1015
		205	13060.2990E 00			206	13190.2090E 00	1016

99999999999 C_{N-M} CONDUCTANCE BTU/HR-°F

121	1430.5300E 00	122	1510.5300E 00	122	1940.2800E 00	122	1950.2800E 00	1017
123	1440.2190E 01	124	1520.2190E 01	124	2060.2800E 00	124	2070.2800E 00	1018
143	1440.1520E 01	151	1520.1520E 01	193	1940.1480E 01	193	1970.3910E 01	1019
194	1950.1480E 01	194	1980.3910E 01	194	5130.3380E-01	195	1960.1480E 01	1020
195	1990.3910E 01	196	2000.3190E 01	196	5150.5030E-01	196	6160.3030E-01	1021
197	1980.1460E 01	197	2010.3950E 01	198	1990.1460E 01	198	2020.3950E 01	1022
198	5120.6080E-01	199	2000.1460E 01	199	2030.3950E 01	200	2040.3950E 01	1023
200	5160.3030E-01	201	2020.1460E 01	201	2050.3910E 01	202	2030.1480E 01	1024
202	2060.3910E 01	203	2040.1460E 01	203	2070.3910E 01	204	2080.3910E 01	1025
205	2060.1480E 01			206	2070.1460E 01			1026
207	2080.1480E 01	207	14450.1600E 00	208	14440.1600E 00	208	14540.1600E 00	1027
361	3620.1080E 01	361	3630.2340E 00	361	3640.1080E 01	361	3650.2340E 00	1028
362	3630.5350E 00	362	3650.5350E 00	362	3750.8280E 00	362	3760.8280E 00	1029
362	3810.1200E 01	362	5400.4420E-01	362	10200.4770E 00	363	3640.5350E 00	1030
363	3750.8150E 00	363	3810.1050E 00	363	3820.1160E 00	364	3650.5350E 00	1031
364	3750.8280E 00	364	3760.8280E 00	364	3820.1110E 01	364	5400.4420E-01	1032
364	10200.5180E 00	365	5700.9920E-01	365	3760.8150E 00	365	3810.1050E 00	1033
365	3820.1160E 00	370	5830.5970E-01	375	3780.4800E 00	375	10200.1260E 00	1034
376	3790.4800E 00	376	10200.1260E 00	380	3820.4800E 00	381	3820.2190E 00	1035
381	4800.1330E 00	381	4840.1770E 00	381	10200.1070E 01	382	4800.3670E 00	1036
382	4830.1250E 00	382	10200.9940E 00	402	4030.1320E 01	402	4050.9480E 00	1037
402	4120.1480E 01	402	4130.6530E 00	402	4160.5350E 00	402	5110.9720E 00	1038
								1039

C_{N-M} CONDUCTANCE BTU/HR-°F

1	2	3	4	5	6	7	8	
123456789	123456789	123456789	123456789	123456789	123456789	123456789	123456789	
402 5620.9940E 01	402 5620.6620E 00	403 4040.1020E 01	403 4130.9250E 00					1040
403 5620.2700E 01	404 4050.9900E 00	404 4060.1340E 01	404 5620.6230E 00					1041
405 4160.4380E 00	405 5110.2190E 02	405 5620.7230E 00	406 4070.8210E 00					1042
406 4130.1470E 01	406 4160.1090E 01	406 4250.1030E 01	406 4850.8060E 00					1043
	407 4080.8430E 00	407 4140.1760E 01	407 4170.1090E 01					1044
407 4260.1050E 01	407 4860.8960E 00							1045
408 4090.1410E 01	408 4150.1430E 01	408 4180.6890E 00	408 4270.7780E 00					1046
408 4870.7390E 00		409 4100.1220E 01	409 4150.1010E 01					1047
409 4180.1320E 01	409 4290.2670E 00	409 4870.1040E 01	409 5630.1410E 01					1048
410 4110.7360E 00	410 4150.1560E 01	410 4180.8810E 00	410 4320.9150E 00					1049
410 4870.8800E 00	411 4120.7980E 00	411 4140.1740E 01	411 4170.1220E 01					1050
411 4330.9660E 00	411 4860.9330E 00	412 4130.1500E 01	412 4160.1210E 01					1051
412 4340.9010E 00	412 4850.9620E 00	412 5330.1230E 00	412 5430.3200E 00					1052
413 4140.6180E 00	414 4150.6250E 00	416 4170.4880E 00	416 4250.1170E 01					1053
416 4340.9650E 00	416 4850.9120E 00	416 4850.9230E 00	416 5430.3040E 00					1054
417 4180.3100E 00	417 4260.1180E 01	417 4330.1020E 01	417 4860.9850E 00					1055
417 4860.1000E 01	418 4270.8760E 00	418 4290.2660E 00	418 4320.7830E 00					1056
418 4870.8320E 00	418 4870.7540E 00	418 4870.1030E 01	423 4240.1240E 01					1057
423 4350.9510E 00	423 4830.2000E 01	423 4840.1530E 01	423 4850.1400E 01					1058
423 5110.3330E 02	423 5230.1210E 00	424 4250.6540E 00	424 4360.1260E 01					1059
424 4830.2270E 01		425 4260.3920E 00	425 4370.2640E 01					1060
425 4850.1330E 01		426 4270.4070E 00	426 4380.2700E 01					1061
426 4860.1440E 01			427 4280.4400E 00					1062
427 4390.2290E 01	427 4870.1420E 01		428 4290.2890E 01					1063
428 4300.3610E 00	428 4400.3380E 01		429 4300.1230E 01					1064
429 4310.1900E 01	429 4870.3780E 00	429 5340.8780E 00	429 5350.1240E 00					1065
429 5360.1200E 00	429 5570.1950E 01	430 4310.5450E 00	430 4410.5040E 01					1066
430 4950.9710E 01	431 4320.3890E 00	431 4420.3820E 01	432 4330.6280E 00					1067
432 4430.2190E 01	432 4870.1180E 01	433 4340.6110E 00	433 4440.2920E 01					1068
433 4860.1130E 01	434 4350.7270E 00	434 4450.2510E 01	434 4850.1020E 01					1069
435 4460.1270E 01	435 4840.2180E 01	435 5400.2460E-01	436 4370.4200E 00					1070
436 4470.2120E 01	436 4810.1350E 01		437 4380.2630E 00					1071
437 4480.3920E 01		438 4390.2740E 00	438 4490.4010E 01					1072
		439 4400.2780E 00	439 4500.3410E 01					1073
	440 4410.4810E 00	440 4510.4560E 01						1074
441 4420.3970E 00	441 4580.3180E 01	441 4950.8820E 01	442 4430.3750E 00					1075
442 4590.2870E 01	442 5750.6080E 00	443 4440.3330E 00	443 4600.1980E 01					1076
443 5740.4660E 00	443 5750.3100E 00	444 4450.3230E 00	444 4610.2650E 01					1077
445 4460.5110E 00	445 4620.2270E 01	446 4630.1150E 01	446 4820.1850E 01					1078
446 5400.2440E-01	447 4460.2490E 00	447 4530.9930E 00	448 4490.1540E 00					1079
448 4540.3200E 01	449 4500.1600E 00	449 4550.3270E 01	450 4510.1620E 00					1080
450 4560.2790E 01	451 4570.3230E 01	451 4580.3120E 00	452 4530.8140E 00					1081
452 4700.7930E 00	452 4730.3210E 01	452 4740.2300E 01						1082
453 4540.8140E 00	453 4750.5960E 00		454 4550.5180E 00					1083
454 4760.1540E 01		455 4560.5380E 00	455 4770.2170E 01					1084
		456 4570.5470E 00	456 4780.1950E 01					1085
	457 4580.9060E 00	457 4790.1620E 01						1086
458 4590.6810E 00	458 4790.1320E 01	458 4950.2200E 02	459 4600.5080E 00					1087
459 4790.2130E 01	459 5790.2200E 00	460 4610.4380E 00	460 4780.2080E 01					1088
461 4620.4260E 00	461 4770.2550E 01	462 4630.6710E 00	462 4760.1660E 01					1089
463 4640.4960E 00	463 4750.8780E 00	463 4800.9380E 00	463 5400.1850E 00					1090
463 5590.4770E 00	464 4650.3980E 00	464 4710.1770E 01	464 4740.2820E 01					1091

C_{N-M} CONDUCTANCE BTU/HR-°F

```
        1           2           3           4           5           6           7           8
12345678901234567890123456789012345678901234567890123456789012345678901234567890123456789012345678
```

464	5040.2900E-02	465	4660.4190E 01	465	4710.2950E 00	465	4740.5030E 00								
465	5400.5660E 00	465	5660.2000E 01	466	4690.8030E 00	468	4700.1330E 01								
468	4730.3350E 00	469	4700.1330E 01	469	4740.5880E 00	471	4720.4810E 01								
471	4800.5130E 00	471	5400.5400E 00	471	5460.5700E 00	472	4730.6120E 01								
472	4800.1180E 00	472	5030.1000E 01	473	4810.3350E 00										
474	4750.9400E 00	474	5030.9440E 00	474	5040.3300E-02	474	5280.1660E 00								
476	4770.9330E 00	476	5290.1770E 00	476	5770.5280E 00										
		475	4760.1320E 01	475	5100.1520E 02	475	5770.1680E 00								
477	4780.1250E 01	477	5240.5410E 00	477	5300.1170E 00	477	5310.6350E-01								
477	5550.1290E 00	477	5770.2840E 00												
478	4790.8710E 00	478	5240.2940E 00	478	5310.6170E-01	478	5370.1200E 00								
478	5380.1200E 00	478	5550.1350E 00	478	5710.3160E 00	478	5730.2780E 00								
				479	5270.1800E 00	479	5730.5120E 00								
		480	4810.3870E 01	480	4820.3400E 01	480	5400.2310E 00								
481	4820.2950E 01	481	4830.2870E 01	481	5400.2470E-01	482	4840.1910E 01								
483	4840.5170E 01	483	5400.2470E-01	485	4860.8165E 00	485	5190.5530E 00								
485	5230.6650E 00	486	4870.8400E 00	486	5230.3020E 00	486	5780.6650E 00								
487	5780.3650E 00	495	5140.1690E 00	510	5130.3370E-01	511	5120.6650E-01								
514	5150.1520E-01	514	5160.1520E-01	514	6160.1520E-01	517	5180.2610E 01								
517	5630.1010E-01	518	5630.1010E-01	523	5760.4660E 00	524	5790.4100E 00								
530	5320.5080E 01	546	5470.1030E 01	546	5480.2620E 01	546	5490.4450E-01								
547	5480.8750E 00	547	5490.4510E-01	550	5510.2460E 01	550	5520.1360E-01								
551	5520.1360E-01	552	5530.5720E 00	553	5550.2150E 01	557	5580.3090E 01								
576	5770.4220E 00	578	5790.4530E 00	1440	14410.3570E 01	1440	14420.1990E 01								
1440	14460.1990E 01	1440	14480.3650E 01	1441	14430.1990E 01	1441	14470.1990E 01								
1441	14490.3650E 01	1442	14430.2310E 01	1442	14440.1990E 01	1442	14480.1870E 01								
1443	14450.1990E 01	1443	14490.1870E 01	1444	14450.3570E 01	1444	14460.1990E 01								
1444	14480.3650E 01	1445	14470.1990E 01	1445	14490.3650E 01	1446	14470.2310E 01								
1446	14480.1870E 01	1447	14480.1870E 01	2406	24070.1100E 01	2407	54070.4200E-01								
2408	34070.9600E 00	2408	54080.4200E-01	2424	24250.1580E 01	2425	24260.1310E 01								
2426	54380.4200E-01	2427	34260.1190E 01	2427	54390.4200E-01	2428	54400.4200E-01								
2452	54530.4200E-01	2454	24550.1040E 01	2454	34530.1200E 01	2455	54550.4200E-01								
2456	34550.9440E 00	2456	54560.4200E-01	2457	54570.4200E-01	2473	54730.4200E-01								
2474	54740.4200E-01	2476	24770.4710E 00	2476	54760.4200E-01	2478	34770.4710E 00								
2479	34780.4710E 00	3477	54770.4200E-01	3478	54790.4200E-01										

99999999999 TIME TABLE - HRS

61

0.0	0.025	0.050	0.075	0.100	0.125	0.150	0.175
0.200	0.225	0.250	0.275	0.300	0.325	0.350	0.375
0.400	0.425	0.450	0.475	0.500	0.525	0.550	0.575
0.600	0.625	0.650	0.675	0.700	0.725	0.750	0.775
0.800	0.825	0.850	0.875	0.900	0.925	0.950	0.975
1.000	1.025	1.050	1.075	1.100	1.125	1.150	1.175
1.200	1.225	1.250	1.275	1.300	1.325	1.350	1.375
1.400	1.425	1.450	1.475	1.500			

99999999999 HEAT FLUX TABLES BTU/HR

536 1.0 ◀ MULTIPLIER

NODE NUMBER

NOTE: Node 536 is a zero flux node until the PRS is turned on. All zero flux nodes listed receive heat flux when aperture is opened or other operation occurs.

HEAT FLUX TABLE BTU/HR

1	2	3	4	5	6	7	8	
123456789	0123456789	0123456789	0123456789	0123456789	0123456789	0123456789	0123456789	0
NODE NUMBER / MULTIPLIER								
527 1.0								1144
9.890	9.890	9.890	9.890	9.890	9.890	9.890	9.890	1145
9.890	9.890	9.890	9.890	9.890	9.890	9.890	9.890	1146
9.890	9.890	9.890	9.890	9.890	9.890	9.890	9.890	1147
9.890	9.890	9.890	9.890	9.890	9.890	9.890	9.890	1148
9.890	9.890	9.890	9.890	9.890	9.890	9.890	9.890	1149
9.890	9.890	9.890	9.890	9.890	9.890	9.890	9.890	1150
9.890	9.890	9.890	9.890	9.890	9.890	9.890	9.890	1151
9.890	9.890	9.890	9.890	9.890				1152
531 1.0								1153
0.068	0.068	0.068	0.068	0.068	0.068	0.068	0.068	1154
0.068	0.068	0.068	0.068	0.068	0.068	0.068	0.068	1155
0.068	0.068	0.068	0.068	0.068	0.068	0.068	0.068	1156
0.068	0.068	0.068	0.068	0.068	0.068	0.068	0.068	1157
0.068	0.068	0.068	0.068	0.068	0.068	0.068	0.068	1158
0.068	0.068	0.068	0.068	0.068	0.068	0.068	0.068	1159
0.068	0.068	0.068	0.068	0.068	0.068	0.068	0.068	1160
0.068	0.068	0.068	0.068	0.068				1161
530 1.0								1162
3.410	3.410	3.410	3.410	3.410	3.410	3.410	3.410	1163
3.410	3.410	3.410	3.410	3.410	3.410	3.410	3.410	1164
3.410	3.410	3.410	3.410	3.410	3.410	3.410	3.410	1165
3.410	3.410	3.410	3.410	3.410	3.410	3.410	3.410	1166
3.410	3.410	3.410	3.410	3.410	3.410	3.410	3.410	1167
3.410	3.410	3.410	3.410	3.410	3.410	3.410	3.410	1168
3.410	3.410	3.410	3.410	3.410				1169
529 1.0								1170
1.705	1.705	1.705	1.705	1.705	1.705	1.705	1.705	1171
1.705	1.705	1.705	1.705	1.705	1.705	1.705	1.705	1172
1.705	1.705	1.705	1.705	1.705	1.705	1.705	1.705	1173
1.705	1.705	1.705	1.705	1.705	1.705	1.705	1.705	1174
1.705	1.705	1.705	1.705	1.705	1.705	1.705	1.705	1175
1.705	1.705	1.705	1.705	1.705	1.705	1.705	1.705	1176
1.705	1.705	1.705	1.705	1.705				1177
528 1.0								1178
1.023	1.023	1.023	1.023	1.023	1.023	1.023	1.023	1179
1.023	1.023	1.023	1.023	1.023	1.023	1.023	1.023	1180
1.023	1.023	1.023	1.023	1.023	1.023	1.023	1.023	1181
1.023	1.023	1.023	1.023	1.023	1.023	1.023	1.023	1182
1.023	1.023	1.023	1.023	1.023	1.023	1.023	1.023	1183
1.023	1.023	1.023	1.023	1.023	1.023	1.023	1.023	1184
1.023	1.023	1.023	1.023	1.023				1185
535 1.0								1186
1.364	1.364	1.364	1.364	1.364	1.364	1.364	1.364	1187
1.364	1.364	1.364	1.364	1.364	1.364	1.364	1.364	1188
1.364	1.364	1.364	1.364	1.364	1.364	1.364	1.364	1189
								1190
								1191
								1192
								1193
								1194
								1195

HEAT FLUX TABLE BTU/HR

```
         1         2         3         4         5         6         7         8
123456789012345678901234567890123456789012345678901234567890123456789012345678901234567890

  1.364     1.364     1.364     1.364     1.364     1.364     1.364     1.364
  1.364     1.364     1.364     1.364     1.364     1.364     1.364     1.364
  1.364     1.364     1.364     1.364     1.364     1.364     1.364     1.364
  1.364     1.364     1.364     1.364     1.364     1.364     1.364     1.364
  1.364     1.364     1.364     1.364     1.364
 538    1.0
  0.375     0.375     0.375     0.375     0.375     0.375     0.375     0.375
  0.375     0.375     0.375     0.375     0.375     0.375     0.375     0.375
  0.375     0.375     0.375     0.375     0.375     0.375     0.375     0.375
  0.375     0.375     0.375     0.375     0.375     0.375     0.375     0.375
  0.375     0.375     0.375     0.375     0.375     0.375     0.375     0.375
  0.375     0.375     0.375     0.375     0.375     0.375     0.375     0.375
  0.375     0.375     0.375     0.375     0.375     0.375     0.375     0.375
  0.375     0.375     0.375     0.375     0.375
 537    1.0
  2.830     2.830     2.830     2.830     2.830     2.830     2.830     2.830
  2.830     2.830     2.830     2.830     2.830     2.830     2.830     2.830
  2.830     2.830     2.830     2.830     2.830     2.830     2.830     2.830
  2.830     2.830     2.830     2.830     2.830     2.830     2.830     2.830
  2.830     2.830     2.830     2.830     2.830     2.830     2.830     2.830
  2.830     2.830     2.830     2.830     2.830     2.830     2.830     2.830
  2.830     2.830     2.830     2.830     2.830     2.830     2.830     2.830
  2.830     2.830     2.830     2.830     2.830
 533    1.0
  0.341     0.341     0.341     0.341     0.341     0.341     0.341     0.341
  0.341     0.341     0.341     0.341     0.341     0.341     0.341     0.341
  0.341     0.341     0.341     0.341     0.341     0.341     0.341     0.341
  0.341     0.341     0.341     0.341     0.341     0.341     0.341     0.341
  0.341     0.341     0.341     0.341     0.341     0.341     0.341     0.341
  0.341     0.341     0.341     0.341     0.341     0.341     0.341     0.341
  0.341     0.341     0.341     0.341     0.341     0.341     0.341     0.341
  0.341     0.341     0.341     0.341     0.341
 543    1.0
 17.732    17.732    17.732    17.732    17.732    17.732    17.732    17.732
 17.732    17.732    17.732    17.732    17.732    17.732    17.732    17.732
 17.732    17.732    17.732    17.732    17.732    17.732    17.732    17.732
 17.732    17.732    17.732    17.732    17.732    17.732    17.732    17.732
 17.732    17.732    17.732    17.732    17.732    17.732    17.732    17.732
 17.732    17.732    17.732    17.732    17.732    17.732    17.732    17.732
 17.732    17.732    17.732    17.732    17.732    17.732    17.732    17.732
 17.732    17.732    17.732    17.732    17.732
 562    1.0
 566    1.0
```

HEAT FLUX TABLE BTU/HR

```
         1         2         3         4         5         6         7         8
12345678901234567890123456789012345678901234567890123456789012345678901234567890
                                                                                1248
                                                                                1249
                                                                                1250
                                                                                1251
                                                                                1252
                                                                                1253
                                                                                1254
  558    1.0                                                                    1255
                                                                                1256
                                                                                1257
                                                                                1258
                                                                                1259
                                                                                1260
                                                                                1261
                                                                                1262
                                                                                1263
  532    1.0                                                                    1264
                                                                                1265
                                                                                1266
                                                                                1267
                                                                                1268
                                                                                1269
                                                                                1270
                                                                                1271
                                                                                1272
  550    1.0                                                                    1273
                                                                                1274
                                                                                1275
                                                                                1276
                                                                                1277
                                                                                1278
                                                                                1279
                                                                                1280
                                                                                1281
  559  1.0                                                                      1282
                                                                                1283
                                                                                1284
                                                                                1285
                                                                                1286
                                                                                1287
                                                                                1288
                                                                                1289
                                                                                1290
  401    1.0                                                                    1291
                                                                                1292
                                                                                1293
                                                                                1294
                                                                                1295
                                                                                1296
                                                                                1297
                                                                                1298
                                                                                1299
```

HEAT FLUX TABLE BTU/HR

```
         1         2         3         4         5         6         7         8
123456789012345678901234567890123456789012345678901234567890123456789012345678901234567890

 402    1.0                                                                          1300
                                                                                     1301
                                                                                     1302
                                                                                     1303
                                                                                     1304
                                                                                     1305
                                                                                     1306
                                                                                     1307
                                                                                     1308
 403    1.0                                                                          1309
                                                                                     1310
                                                                                     1311
                                                                                     1312
                                                                                     1313
                                                                                     1314
                                                                                     1315
                                                                                     1316
                                                                                     1317
 404    1.0                                                                          1318
                                                                                     1319
                                                                                     1320
                                                                                     1321
                                                                                     1322
                                                                                     1323
                                                                                     1324
                                                                                     1325
                                                                                     1326
 405    1.0                                                                          1327
                                                                                     1328
                                                                                     1329
                                                                                     1330
                                                                                     1331
                                                                                     1332
                                                                                     1333
                                                                                     1334
                                                                                     1335
 466    1.0                                                                          1336
                                                                                     1337
                                                                                     1338
                                                                                     1339
                                                                                     1340
                                                                                     1341
                                                                                     1342
                                                                                     1343
                                                                                     1344
 467    1.0                                                                          1345
                                                                                     1346
                                                                                     1347
                                                                                     1348
                                                                                     1349
                                                                                     1350
                                                                                     1351
```

HEAT FLUX TABLE BTU/HR

```
        1         2         3         4         5         6         7         8
12345678901234567890123456789012345678901234567890123456789012345678901234567890
```

```
 468    1.0                                                                      1352
                                                                                 1353
                                                                                 1354
                                                                                 1355
                                                                                 1356
                                                                                 1357
                                                                                 1358
                                                                                 1359
                                                                                 1360
                                                                                 1361
                                                                                 1362
 469    1.0                                                                      1363
                                                                                 1364
                                                                                 1365
                                                                                 1366
                                                                                 1367
                                                                                 1368
                                                                                 1369
                                                                                 1370
                                                                                 1371
 470    1.0                                                                      1372
                                                                                 1373
                                                                                 1374
                                                                                 1375
                                                                                 1376
                                                                                 1377
                                                                                 1378
                                                                                 1379
                                                                                 1380
5407    1.0                                                                      1381
  0.4433    0.4433    0.4433    0.4433    0.4433    0.4433    0.4433    0.4433  1382
  0.4433    0.4433    0.4433    0.4433    0.4433    0.4433    0.4433    0.4433  1383
  0.4433    0.4433    0.4433    0.4433    0.4433    0.4433    0.4433    0.4433  1384
  0.4433    0.4433    0.4433    0.4433    0.4433    0.4433    0.4433    0.4433  1385
  0.4433    0.4433    0.4433    0.4433    0.4433    0.4433    0.4433    0.4433  1386
  0.4433    0.4433    0.4433    0.4433    0.4433    0.4433    0.4433    0.4433  1387
  0.4433    0.4433    0.4433    0.4433    0.4433    0.4433    0.4433    0.4433  1388
  0.4433    0.4433    0.4433    0.4433    0.4433                                1389
5408    1.0                                                                      1390
  0.4433    0.4433    0.4433    0.4433    0.4433    0.4433    0.4433    0.4433  1391
  0.4433    0.4433    0.4433    0.4433    0.4433    0.4433    0.4433    0.4433  1392
  0.4433    0.4433    0.4433    0.4433    0.4433    0.4433    0.4433    0.4433  1393
  0.4433    0.4433    0.4433    0.4433    0.4433    0.4433    0.4433    0.4433  1394
  0.4433    0.4433    0.4433    0.4433    0.4433    0.4433    0.4433    0.4433  1395
  0.4433    0.4433    0.4433    0.4433    0.4433    0.4433    0.4433    0.4433  1396
  0.4433    0.4433    0.4433    0.4433    0.4433    0.4433    0.4433    0.4433  1397
  0.4433    0.4433    0.4433    0.4433    0.4433                                1398
5438    1.0                                                                      1399
  0.4433    0.4433    0.4433    0.4433    0.4433    0.4433    0.4433    0.4433  1400
  0.4433    0.4433    0.4433    0.4433    0.4433    0.4433    0.4433    0.4433  1401
  0.4433    0.4433    0.4433    0.4433    0.4433    0.4433    0.4433    0.4433  1402
  0.4433    0.4433    0.4433    0.4433    0.4433    0.4433    0.4433    0.4433  1403
```

HEAT FLUX TABLE BTU/HR

1	2	3	4	5	6	7	8	
123456789	123456789	123456789	123456789	123456789	123456789	123456789	123456789	
0.4433	0.4433	0.4433	0.4433	0.4433	0.4433	0.4433	0.4433	1404
0.4433	0.4433	0.4433	0.4433	0.4433	0.4433	0.4433	0.4433	1405
0.4433	0.4433	0.4433	0.4433	0.4433	0.4433	0.4433	0.4433	1406
0.4433	0.4433	0.4433	0.4433	0.4433				1407
5439 1.0								1408
0.4433	0.4433	0.4433	0.4433	0.4433	0.4433	0.4433	0.4433	1409
0.4433	0.4433	0.4433	0.4433	0.4433	0.4433	0.4433	0.4433	1410
0.4433	0.4433	0.4433	0.4433	0.4433	0.4433	0.4433	0.4433	1411
0.4433	0.4433	0.4433	0.4433	0.4433	0.4433	0.4433	0.4433	1412
0.4433	0.4433	0.4433	0.4433	0.4433	0.4433	0.4433	0.4433	1413
0.4433	0.4433	0.4433	0.4433	0.4433	0.4433	0.4433	0.4433	1414
0.4433	0.4433	0.4433	0.4433	0.4433	0.4433	0.4433	0.4433	1415
0.4433	0.4433	0.4433	0.4433	0.4433				1416
5440 1.0								1417
0.4433	0.4433	0.4433	0.4433	0.4433	0.4433	0.4433	0.4433	1418
0.4433	0.4433	0.4433	0.4433	0.4433	0.4433	0.4433	0.4433	1419
0.4433	0.4433	0.4433	0.4433	0.4433	0.4433	0.4433	0.4433	1420
0.4433	0.4433	0.4433	0.4433	0.4433	0.4433	0.4433	0.4433	1421
0.4433	0.4433	0.4433	0.4433	0.4433	0.4433	0.4433	0.4433	1422
0.4433	0.4433	0.4433	0.4433	0.4433	0.4433	0.4433	0.4433	1423
0.4433	0.4433	0.4433	0.4433	0.4433	0.4433	0.4433	0.4433	1424
0.4433	0.4433	0.4433	0.4433	0.4433				1425
5453 1.0								1426
0.4433	0.4433	0.4433	0.4433	0.4433	0.4433	0.4433	0.4433	1427
0.4433	0.4433	0.4433	0.4433	0.4433	0.4433	0.4433	0.4433	1428
0.4433	0.4433	0.4433	0.4433	0.4433	0.4433	0.4433	0.4433	1429
0.4433	0.4433	0.4433	0.4433	0.4433	0.4433	0.4433	0.4433	1430
0.4433	0.4433	0.4433	0.4433	0.4433	0.4433	0.4433	0.4433	1431
0.4433	0.4433	0.4433	0.4433	0.4433	0.4433	0.4433	0.4433	1432
0.4433	0.4433	0.4433	0.4433	0.4433	0.4433	0.4433	0.4433	1433
0.4433	0.4433	0.4433	0.4433	0.4433				1434
5455 1.0								1435
0.4433	0.4433	0.4433	0.4433	0.4433	0.4433	0.4433	0.4433	1436
0.4433	0.4433	0.4433	0.4433	0.4433	0.4433	0.4433	0.4433	1437
0.4433	0.4433	0.4433	0.4433	0.4433	0.4433	0.4433	0.4433	1438
0.4433	0.4433	0.4433	0.4433	0.4433	0.4433	0.4433	0.4433	1439
0.4433	0.4433	0.4433	0.4433	0.4433	0.4433	0.4433	0.4433	1440
0.4433	0.4433	0.4433	0.4433	0.4433	0.4433	0.4433	0.4433	1441
0.4433	0.4433	0.4433	0.4433	0.4433	0.4433	0.4433	0.4433	1442
0.4433	0.4433	0.4433	0.4433	0.4433				1443
5456 1.0								1444
0.4433	0.4433	0.4433	0.4433	0.4433	0.4433	0.4433	0.4433	1445
0.4433	0.4433	0.4433	0.4433	0.4433	0.4433	0.4433	0.4433	1446
0.4433	0.4433	0.4433	0.4433	0.4433	0.4433	0.4433	0.4433	1447
0.4433	0.4433	0.4433	0.4433	0.4433	0.4433	0.4433	0.4433	1448
0.4433	0.4433	0.4433	0.4433	0.4433	0.4433	0.4433	0.4433	1449
0.4433	0.4433	0.4433	0.4433	0.4433	0.4433	0.4433	0.4433	1450
0.4433	0.4433	0.4433	0.4433	0.4433	0.4433	0.4433	0.4433	1451
0.4433	0.4433	0.4433	0.4433	0.4433				1452
5457 1.0								1453
0.4433	0.4433	0.4433	0.4433	0.4433	0.4433	0.4433	0.4433	1454
0.4433	0.4433	0.4433	0.4433	0.4433	0.4433	0.4433	0.4433	1455

HEAT FLUX TABLE BTU/HR

```
         1         2         3         4         5         6         7         8
12345678901234567890123456789012345678901234567890123456789012345678901234567890
```

```
   0.4433    0.4433    0.4433    0.4433    0.4433    0.4433    0.4433    0.4433
   0.4433    0.4433    0.4433    0.4433    0.4433    0.4433    0.4433    0.4433
   0.4433    0.4433    0.4433    0.4433    0.4433    0.4433    0.4433    0.4433
   0.4433    0.4433    0.4433    0.4433    0.4433    0.4433    0.4433    0.4433
   0.4433    0.4433    0.4433    0.4433    0.4433    0.4433    0.4433    0.4433
   0.4433    0.4433    0.4433    0.4433    0.4433
5473    1.0
   0.4433    0.4433    0.4433    0.4433    0.4433    0.4433    0.4433    0.4433
   0.4433    0.4433    0.4433    0.4433    0.4433    0.4433    0.4433    0.4433
   0.4433    0.4433    0.4433    0.4433    0.4433    0.4433    0.4433    0.4433
   0.4433    0.4433    0.4433    0.4433    0.4433    0.4433    0.4433    0.4433
   0.4433    0.4433    0.4433    0.4433    0.4433    0.4433    0.4433    0.4433
   0.4433    0.4433    0.4433    0.4433    0.4433    0.4433    0.4433    0.4433
   0.4433    0.4433    0.4433    0.4433    0.4433    0.4433    0.4433    0.4433
   0.4433    0.4433    0.4433    0.4433    0.4433
5474    1.0
   0.4433    0.4433    0.4433    0.4433    0.4433    0.4433    0.4433    0.4433
   0.4433    0.4433    0.4433    0.4433    0.4433    0.4433    0.4433    0.4433
   0.4433    0.4433    0.4433    0.4433    0.4433    0.4433    0.4433    0.4433
   0.4433    0.4433    0.4433    0.4433    0.4433    0.4433    0.4433    0.4433
   0.4433    0.4433    0.4433    0.4433    0.4433    0.4433    0.4433    0.4433
   0.4433    0.4433    0.4433    0.4433    0.4433    0.4433    0.4433    0.4433
   0.4433    0.4433    0.4433    0.4433    0.4433    0.4433    0.4433    0.4433
   0.4433    0.4433    0.4433    0.4433    0.4433
5476    1.0
   0.4433    0.4433    0.4433    0.4433    0.4433    0.4433    0.4433    0.4433
   0.4433    0.4433    0.4433    0.4433    0.4433    0.4433    0.4433    0.4433
   0.4433    0.4433    0.4433    0.4433    0.4433    0.4433    0.4433    0.4433
   0.4433    0.4433    0.4433    0.4433    0.4433    0.4433    0.4433    0.4433
   0.4433    0.4433    0.4433    0.4433    0.4433    0.4433    0.4433    0.4433
   0.4433    0.4433    0.4433    0.4433    0.4433    0.4433    0.4433    0.4433
   0.4433    0.4433    0.4433    0.4433    0.4433    0.4433    0.4433    0.4433
   0.4433    0.4433    0.4433    0.4433    0.4433
5477    1.0
   0.4433    0.4433    0.4433    0.4433    0.4433    0.4433    0.4433    0.4433
   0.4433    0.4433    0.4433    0.4433    0.4433    0.4433    0.4433    0.4433
   0.4433    0.4433    0.4433    0.4433    0.4433    0.4433    0.4433    0.4433
   0.4433    0.4433    0.4433    0.4433    0.4433    0.4433    0.4433    0.4433
   0.4433    0.4433    0.4433    0.4433    0.4433    0.4433    0.4433    0.4433
   0.4433    0.4433    0.4433    0.4433    0.4433    0.4433    0.4433    0.4433
   0.4433    0.4433    0.4433    0.4433    0.4433    0.4433    0.4433    0.4433
   0.4433    0.4433    0.4433    0.4433    0.4433
5479    1.0
   0.4433    0.4433    0.4433    0.4433    0.4433    0.4433    0.4433    0.4433
   0.4433    0.4433    0.4433    0.4433    0.4433    0.4433    0.4433    0.4433
   0.4433    0.4433    0.4433    0.4433    0.4433    0.4433    0.4433    0.4433
   0.4433    0.4433    0.4433    0.4433    0.4433    0.4433    0.4433    0.4433
   0.4433    0.4433    0.4433    0.4433    0.4433    0.4433    0.4433    0.4433
   0.4433    0.4433    0.4433    0.4433    0.4433    0.4433    0.4433    0.4433
   0.4433    0.4433    0.4433    0.4433    0.4433    0.4433    0.4433    0.4433
   0.4433    0.4433    0.4433    0.4433    0.4433
9999999999999
```

```
1456
1457
1458
1459
1460
1461
1462
1463
1464
1465
1466
1467
1468
1469
1470
1471
1472
1473
1474
1475
1476
1477
1478
1479
1480
1481
1482
1483
1484
1485
1486
1487
1488
1489
1490
1491
1492
1493
1494
1495
1496
1497
1498
1499
1500
1501
1502
1503
1504
1505
1506
1507
```

SPECIFIED TEMPERATURE TABLE °F

```
         1         2         3         4         5         6         7         8
123456789012345678901234567890123456789012345678901234567890123456789012345678901234567890

 1300 ◄ NODE NUMBER
  61.65 ◄ TEMPERATURE °F
 1301
  61.647
 1302
  61.647
 1303
  61.647
 1304
  61.647
 1305
  61.647
 1306
  61.647
 1307
  61.647
 1313
  61.647
 1314
  61.647
 1315
  61.647
 1316
  61.647
 1317
  61.647
 1318
  61.647
 1319
  61.647
 1320
  61.647
 1321
  61.647
99999999999999
```

INITIAL TEMPERATURE TABLE °F

NODE TEMPERATURE

49	68.500	50	58.746	51	68.960	52	51.264	53	69.963
54	52.937	55	58.537	56	59.036	57	56.294	58	91.418
59	60.307	60	67.154	61	64.086	62	70.655	63	63.594
64	58.189	70	67.833	72	65.536	73	69.982	75	68.864
76	69.219	77	68.144	121	49.719	122	50.056	123	49.580
124	49.692	138	52.780	143	56.310	144	56.310	151	54.250
152	54.250	193	66.310	194	66.310	195	66.310	196	66.310
197	66.310	198	66.310	199	66.310	200	66.310	201	66.310
202	66.310	203	66.310	204	66.310	205	66.310	206	66.310
207	66.310	208	66.310	361	64.979	362	65.057	363	65.117
364	65.200	365	64.996	370	62.457	375	65.188	376	65.149
377	65.246	378	65.190	379	65.151	380	66.188	381	65.867
382	66.189	393	61.284	401	70.870	402	70.802	403	70.847
404	70.472	405	70.169	406	70.845	407	70.090	408	70.012
409	70.092	410	70.125	411	70.402	412	71.802	413	71.766
414	70.438	415	70.186	416	71.458	417	70.333	418	70.072
423	70.012	424	69.652	425	70.468	426	70.247	427	70.120

INITIAL TEMPERATURE TABLE °F

1		2		3		4		5		6		7		8	
123456789	0	123456789	0	123456789	0	123456789	0	123456789	0	123456789	0	123456789	0	123456789	0
428	69.910	429	69.715	430	69.041	431	69.434	432	69.935						1560
433	70.149	434	70.488	435	69.661	436	69.518	437	70.127						1561
438	70.192	439	70.064	440	69.913	441	68.998	442	69.316						1562
443	69.751	444	69.992	445	70.080	446	69.436	447	69.597						1563
448	70.000	449	70.133	450	69.950	451	69.809	452	69.769						1564
453	69.787	454	70.036	455	70.198	456	69.928	457	69.736						1565
458	68.969	459	69.184	460	69.542	461	69.835	462	69.834						1566
463	69.394	464	68.969	465	68.067	466	68.334	467	68.982						1567
468	69.138	469	69.030	470	69.210	471	68.850	472	69.063						1568
473	69.558	474	69.443	475	69.497	476	69.758	477	69.776						1569
478	69.342	479	69.086	480	68.948	481	69.200	482	69.186						1570
483	69.451	484	69.442	485	70.791	486	70.270	487	70.056						1571
488	69.768	489	69.884	494	61.666	495	63.942	503	69.376						1572
504	69.526	505	69.870	506	69.850	507	69.850	508	69.891						1573
510	69.455	511	70.065	512	66.965	513	67.144	514	66.540						1574
515	67.591	516	67.325	517	70.095	518	70.094	519	70.574						1575
520	69.830	521	69.855	522	69.892	523	70.398	524	69.993						1576
525	70.076	526	69.956	527	64.745	528	62.060	529	63.326						1577
530	56.937	531	57.492	532	56.739	533	71.213	534	69.177						1578
535	72.263	536	65.855	537	69.927	538	57.776	539	69.167						1579
540	66.096	543	80.209	546	68.873	547	68.885	548	68.863						1580
549	68.853	550	90.165	551	88.873	552	72.437	553	71.348						1581
555	71.060	557	69.700	558	69.702	559	71.317	562	70.697						1582
563	70.091	566	68.095	570	70.111	571	69.721	572	69.691						1583
573	69.347	574	69.775	575	69.452	576	70.127	577	69.895						1584
578	70.156	579	70.078	580	69.784	581	69.443	616	67.327						1585
1020	65.728	1021	65.554	1300	68.880	1301	64.250	1302	64.250						1586
1303	64.250	1304	64.250	1305	64.250	1306	64.250	1307	64.250						1587
1308	61.550	1309	61.550	1310	61.550	1311	61.550	1312	61.550						1588
1313	64.250	1314	64.250	1315	64.250	1316	64.250	1317	64.250						1589
1318	64.250	1319	64.250	1320	64.250	1321	64.250	1322	61.550						1590
1401	55.797	1440	143.600	1441	143.600	1442	143.600	1443	143.600						1591
1444	143.600	1445	143.600	1446	143.600	1447	143.600	1448	143.600						1592
1449	143.600	1450	154.350	1451	154.350	1452	154.350	1453	154.350						1593
1454	154.350	1455	154.350	1456	154.350	1457	154.350	1458	154.350						1594
1459	154.350	1494	54.209	2406	63.899	2407	68.756	2408	68.843						1595
2424	69.480	2425	69.509	2426	69.760	2427	71.375	2428	74.475						1596
2452	72.848	2454	71.881	2455	72.058	2456	72.466	2457	74.111						1597
2473	74.774	2474	75.685	2476	75.055	2477	74.954	2478	75.905						1598
2479	79.290	3407	68.392	3426	71.301	3453	71.770	3455	72.308						1599
3477	75.928	3478	79.723	4402	66.123	4409	69.057	4413	70.163						1600
4429	68.677	4435	67.421	4465	65.454	4471	66.403	4474	65.797						1601
4495	66.305	4510	63.129	4511	67.209	5407	65.012	5408	78.115						1602
5438	77.690	5439	79.188	5440	81.902	5453	80.643	5455	79.584						1603
5456	79.832	5457	81.532	5473	82.820	5474	82.941	5476	82.408						1604
5477	83.239	5479	86.652	6402	60.529	6409	66.082	6413	70.476						1605
6429	67.702	6435	61.163	6465	57.427	6471	61.153	6474	54.685						1606
6424	57.231	9428	58.175	9452	52.107	9454	49.989	9457	50.562						1607
9409	70.273	9413	71.340	9414	70.521	9415	70.368	9429	70.455						1608
9447	60.508	9448	60.025	9449	62.787	9450	64.015	9451	69.116						1609
9471	67.113	9474	60.475	9476	57.683	9477	58.121	9478	58.666						1610
9479	66.694	9495	59.262	9510	53.366	9511	61.744								1611

INITIAL TEMPERATURE TABLE °F

```
        1         2         3         4         5         6         7         8
12345678901234567890123456789012345678901234567890123456789012345678901234567890

9999999999
```

1612

NRL-B HEATER DATA

```
        1         2         3         4         5         6         7         8
12345678901234567890123456789012345678901234567890123456789012345678901234567890

2406                              406
2407  4.83        70.0000       68.0000    4.80000    0.40
2406                              406
3407  9.02        70.0000       69.0000    4.80000    0.30
2408                              408
2408  13.98       70.0000       69.0000    4.80000     0.30
2408                              408
2424  3.51        70.0000       71.0000    4.80000     0.40
2425                              425  437
2425  18.5        70.0000       71.0000    4.80000     0.40
2425                              425  437
2426   5.94       70.0000       71.0000    4.80000     0.40
2425                              425  437
3426  10.96       70.0000       72.20000   4.80000     0.40
2427                              426  427  438  439
2427   16.99      70.0000       72.20000   4.80000     0.40
2427                              426  427  438  439
2428  11.06       70.0000       74.0000    4.80000     0.30
2428                              440
2452  16.01       70.0000       72.0000    4.80000     0.30
2452                              452
3453  2.88        70.0000       72.0000    4.80000      0.30
2454                              454
2454   13.74      70.0000       72.0000    4.80000     0.30
2454                              454
2455  4.41        70.0000       72.0000    4.80000     0.30
2454                              454
3455  8.25        70.0000       72.0000    4.80000     0.30
2456                              456
2456  12.78       70.0000       72.0000    4.80000      0.30
2456                              456
2457  10.51       70.0000       73.0000    4.80000      0.30
2457                              457
2473  12.12       70.0000       73.0000    4.80000     0.40
2473                              473
2474  17.03       70.0000       73.0000    4.80000    0.40
2474                              474
2476  5.42        70.0000       74.0000    0.0         6.00
2476                              476
2477  1.82        70.0000       74.0000    0.0         6.00
2476                              476
3477  3.58        70.0000       73.0000    4.80000     0.30
2478                              478
2478  3.66        70.0000       73.0000    4.80000     0.30
2478                              478
3478  1.77        70.0000       75.0000    4.80000     0.30
2479                              479
2479  5.46        70.0000       75.0000    4.80000    0.30
2479                              479
```

See explanation of heater data input in Appendix C.

APPENDIX C

Thermal Distortion Program
Input Data Deck Description

PREFACE

The following pages show the normal deck setup for a thermal distortion program run. The general deck setup is shown first (Figure C-1). This is followed by a card-by-card description of the input data with comments. A card-by-card description of the nominal transient data deck is included in Appendix A. These two descriptions then provide complete information regarding the input data.

A listing of actual data decks set up for distortion runs made at MSFC-HOSC for S082A and S082B complete this Appendix.

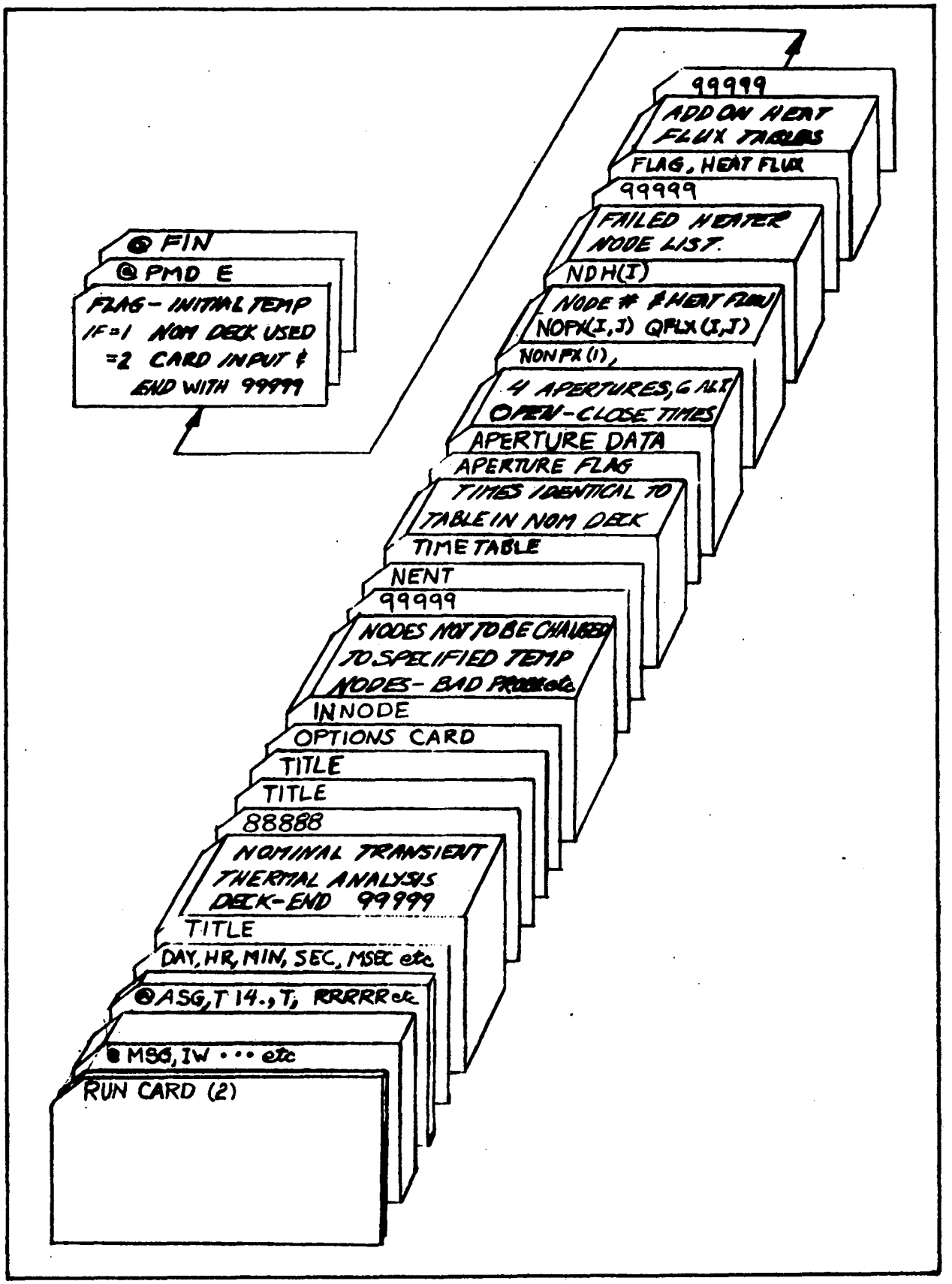

Figure C-1. Thermal Distortion Program - Deck Setup

Input Data Deck Setup

The deck setup for a thermal distortion run at MSFC-HOSC or the NASA Slidell Computer Facility is explained below. Changes will have to be made in the program to run at any other facility.

1. The first two (2) cards must be the RUN cards. They are punched identically, but one must be on a green card.

   An example of the green card is shown below:

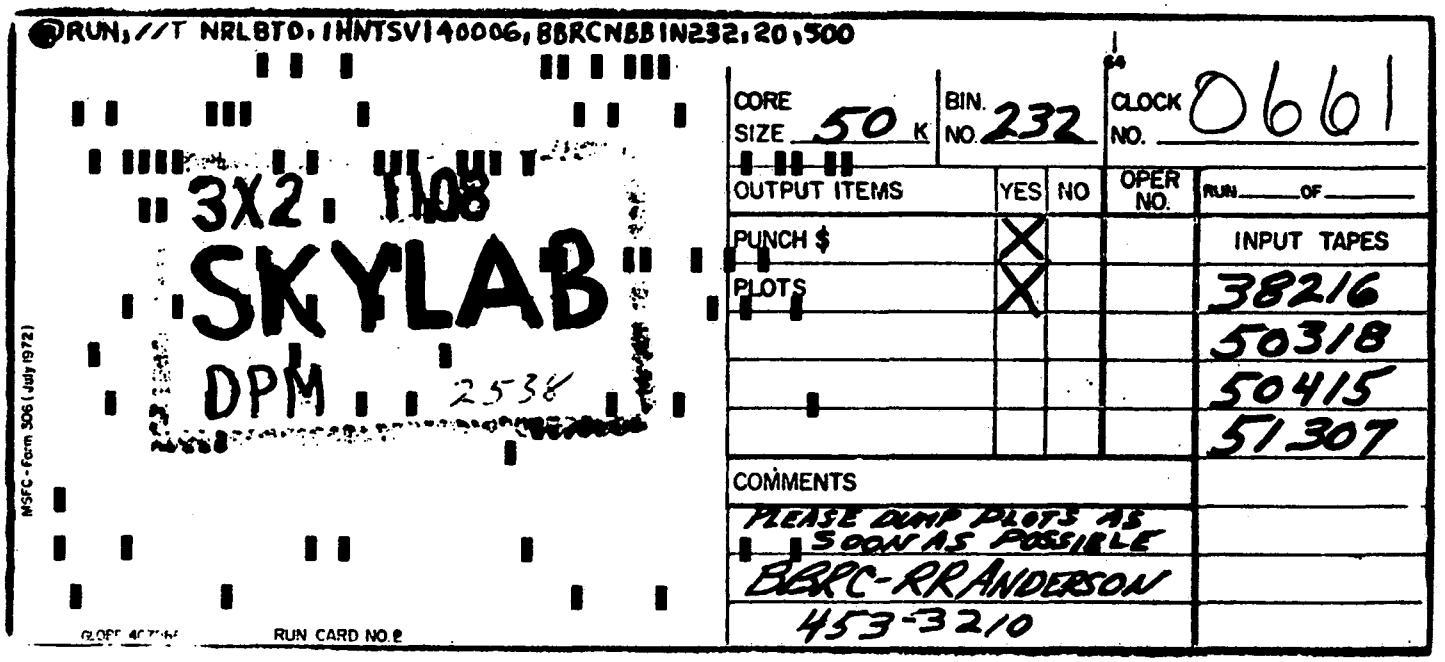

Examples of the RUN cards are shown below:

NOTE 1. The twelve-place accounting number and bin number will change.

2. Capability to run thermal distortion for the HCO S-055 instrument and the HAO S-052 instrument exists in the program.

HCO

```
@RUN,//T HCOTD,1HNTSV140006,BBRCHCBIN232,TT,PPP
@RUN,//T HCOTD,1HNTSV140006,BBRCHCBIN232,TT,PPP
```

TT = estimated run time

PPP = computer output page estimate - max

HAO

```
@RUN,//T HAOTD,1HNTSV140006,BBRCHABIN232,TT,PPP
@RUN,//T HAOTD,1HNTSV140006,BBRCHABIN232,TT,PPP
```

NRL-B

```
@RUN,//T NRLBTD,1HNTSV140006,BBRCNBBIN232,TT,PPP
@RUN,//T NRLBTD,1HNTSV140006,BBRCNBBIN232,TT,PPP
```

NRL-A

```
@RUN,//T NRLATD,1HNTSV140006,BBRCNABIN232,TT,PPP
@RUN,//T NRLATD,1HNTSV140006,BBRCNABIN232,TT,PPP
```

2. The two RUN cards are followed by the following cards:

```
@MSG,IW BACKUP TAPES TO YYYYY ARE AAAAA,BBBBB.
@ASG,T PAR.,T,YYYYY
@REWIND PAR.
@FREE TPF$.
@ASG,T TPF$.,F2/1/POS/10
@ERS TPF$.
@COPIN PAR.,TPF$
@FREE PAR.
@ASG,T 10.,F/1/POS/3
@ASG,T 11.,F/1/POS/3
@ASG,T 12.,F/1/POS/3
@ASG,T 13.,F/1/POS/3
```

YYYYY, AAAAA & BBBBB are program tape reel numbers, YYYYY is used others are backup.

(if nominal data deck from tape is to be used, change this card to read as follows:)

```
@ASG,T 13.,T,XXXXX
```

where XXXXX is tape reel number - also change NOMTP on options card to 0 in column 40 (reference Item 6) and remove nominal data deck from setup (Figure C-1).

3. The next set of cards defines the tape from which Skylab ATM data will be extracted. If the run does not require data from tape, these cards are not necessary and should not be in the deck setup.

The card below is used for the Compressed Format User Tape or the Fixed Format User Tape.

```
@ASG,T 14.,T,RRRRR/SSSSS/.../TTTTT
```

RRRRR, SSSSS...TTTTT are tape reel numbers

The set of cards below are used for the Fixed Format Drum Dump Tape (output by the EUC run--the EUC run converts telemetry data to Engineering units).

```
@ASG,T ATM.,T,RRRRR
@ASG,T ATMF.,F//POS/100
@COPY,G ATM.,ATMF.
@FREE ATM.
@USE 14.,ATMF.
```

4. The next card is shown below:

```
@ASG,T 15.,F/1/POS/3
```

5. The XQT card follows:

HCO

```
@XQT AHCO
```

HAO

```
@XQT AHAO
```

NRL-B

@XQT ANRL-B

NRL-A

@XQT ANRLA

6. The next card defines the orbit period to be run and the number and kind of data tapes to be read. In addition flags are provided to select whether the run uses the nominal transient data deck or tape input, and if distortion parameter plots are to be made.

5	10	15	20	25	30	35	40	45
DAY	HOUR	MIN	SEC	MSEC	NTAPE	KIND	NOMTP	NPLOT

FORMAT 7I5

DAY, HOUR, MIN, SEC, MSEC = Greenwich mean time at beginning of selected data time slice (time on tape where program begins to read probe telemetry data)

NTAPE = Number of Skylab ATM data tapes to be read by the program. NTAPE = 0 if fastran (Drum Storage) is used. NTAPE = -1 if no data is to be extracted from Skylab ATM data tapes.

KIND = 1 For compressed format Skylab ATM data tapes
= 2 For fixed format Skylab ATM data tapes.

NOMTP = 0 Nominal Transient data deck from tape
(see Item 2 above)
= 1 Nominal Transient data deck follows this card

NPLOT = 0 No plots desired; = 1 plots desired.

7. The nominal TRANSIENT data deck follows the above card if, and only if, NOMTP = 1. The deck must be ended by an 888888 card.

```
*************
* DATA DECK *          NOMINAL DATA DECK
*************          Ref. Appendices A & B
```

8. Following the 88888 card which ends the nominal data deck; two title cards are input describing the run to be made.

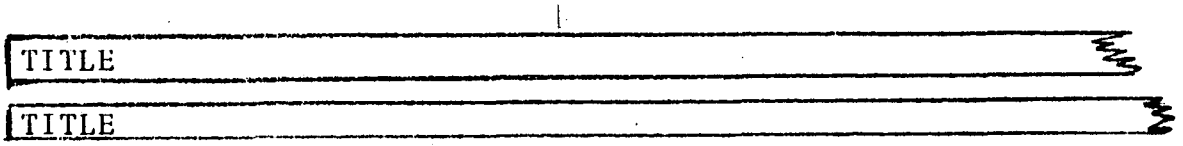

FORMAT 13A6

TITLE - Title cards for the TRANSIENT program. These cards override the title cards of the nominal data deck.

9. The following card can be used to select the options listed individually or to use the options listed on the corresponding card in the nominal data deck.

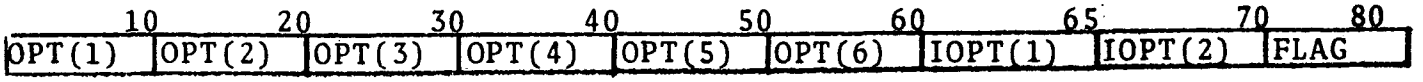

FORMAT 6F10.3, A5, I5, 5X, I5

All data on this card is the same as the data on the TRANSIENT program options card except FLAG.

OPT(1) = THETI = Initial time of orbit - hrs.

OPT(2) = THMAX = Final time of orbit - hrs.

OPT(3) = DT = Integration interval - hrs.

OPT(4) = ORI = Initial orbit number

OPT(5) = ORF = Final orbit number

OPT(6) = TOPO = Print out interval - hrs.

IOPT(1) = = Temperature system desired CENT, RANK, or FAHR if blank printout is in degrees fahrenheit.

IOPT(2) = NTAPE = 0 Output temperature not written to tape

= 1 Output temperature for each print interval stored on tape.

FLAG = = 0 Program uses options input on this card

= 1 Program uses options from nominal data deck.

10.

INNODE(I)	5

FORMAT I5

INNODE(I) The INNODE function is used to delete nodes for which telemetry data has failed or become unusable. See following notes.

The node number of each node that will not change to a specified temperature node is input one per card. The only valid node numbers are those in Table C-1. The final card of this set must have 99999 in columns one (1) thru five (5).

Table C-1 is a list of nodes for which telemetry probe data is normally available.

The program is presently set up such that all nodes for which probes exist will have specified temperature tables made from the telemetry data. If one of these probes fail and the node is entered in the INNODE list--the telemetry data for that node is ignored and the node becomes a computed temperature node.

An exception to the above is when running NRL-B from compressed format PI user tape no probe data is available for 17 Hα nodes, 1300 thru 1307 and 1313 thru 1321. These nodes are flagged as specified temperature nodes in the nominal data deck node data list and constant specified temperatures tables are provided in the nominal data deck for these nodes.

Table C-1
Available Nodes for
Telemetry Probe Data

1. Specified temperature tables from User Tapes can be built for the following nodes.

HCO

5, 6, 7, 8, 9, 10, 11, 12, 109, 110,
111, 112, 113, 114, 115, 116, 117, 118, 119, 120,
141, 142, 149, 150, 747, 749, 752, 754, 755, 787,
789, 790, 792, 794, 795, 797, 802, 836, 837, 838, 841

HAO

9, 97, 98, 99, 100, 101, 102, 103, 104, 105,
106, 107, 108, 147, 148, 155, 156, 177, 178, 179,
180, 181, 182, 183, 184, 185, 186, 187, 188, 189,
190, 191, 192, 878, 879, 880, 881, 913, 930

NRL-B

121, 122, 123, 124, 143, 144, 151, 152, 193, 194,
195, 196, 197, 198, 199, 200, 201, 202, 203, 204,
205, 206, 207, 208, 413, 414, 415, 429, 437, 438,
439, 440, 442, 443, 444, 445, 452, 454, 456, 457,
464, 471, 473, 474, 476, 477, 479, 485, 486, 1440,

1441, 1442, 1443, 1444, 1445, 1446, 1447, 1448, 1449, 1450,
1451, 1452, 1453, 1454, 1455, 1456, 1457, 1458, 1459, 1308,
1309, 1310, 1311, 1312, 1322, 1300, 1301, 1302, 1303, 1304,
1305, 1306, 1307, 1313, 1314, 1315, 1316, 1317, 1318, 1319,
1320, 1321, 559, 555, 2406, 2407, 2408, 2424, 2425, 2426,
2427, 2428, 2452, 2454, 2455, 2456, 2457, 2473, 2474, 2476,
2477, 2478, 2479, 3407, 3426, 2453, 3455, 3477, 3478

NRL-A

145, 146, 153, 154, 20, 24, 28, 32, 18, 19,
22, 23, 26, 27, 30, 31, 17, 21, 25, 29,
9005, 9001, 9002, 125, 127, 126, 128, 129, 131, 132,
130, 310, 311, 312, 323, 324, 325, 328, 329, 330,
356, 357, 358, 9000, 9003, 9004, 9006

2. The program will build specified temperature tables for these nodes from User Tapes unless the user tells the program not to. The way the user tells the program not to build a table for a node is through the input INNØDE.

If the user tells the program not to build a specified temperature table for a node, that node will remain a computed node or a specified temperature node depending upon what it is in the nominal data deck.

11.

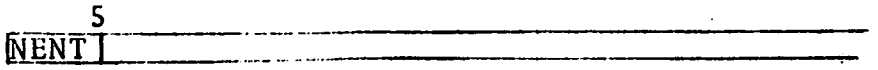

FORMAT I5

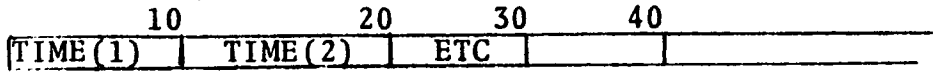

FORMAT (8 F10.0)

NENT = Number of times in the time array

TYME = Transient orbital times. These times must be the same as those in the nominal data deck (61 times are now used from "0" to 1.5 hrs. at 0.025 hr increments for NRL A & B)

The TYME table must have a 0.0 entry as the first entry.

The TYME table in the nominal TRANSIENT data deck must be identical to the TYME table in the Thermal Distortion data deck.

12.

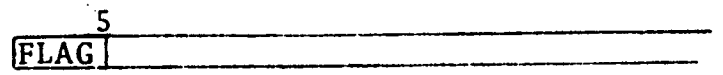

FORMAT I5

FLAG = 0 If aperture data is to follow this card - card input

= 1 If aperture data is to be read from the nominal input deck

= 2 If the aperture data is to be extracted from the Skylab ATM data tape. (This option cannot be selected if NTAPE is negative.) Note also that telemetry data noise and possible logic errors preclude reading aperture open and close times from telemetry tape--in practice all aperture open and close times, S082B PRS operating times and S082A Short and Long wavelength operating times were obtained from autoscan data and input on cards. The input open and close times must be relative to the run start time, zero, and correlated with the initial GMT time input in Item 6 above.

Aperture data in I5, 6F10.3 format (identical to transient input) follows the above card if FLAG = 0. The input data must be followed by a 99999 card. Six times can be input; 3 openings, 3 closings as shown below.

5	15	25	
APERTURE NODE NO	OPENING TIME	CLOSING TIME	ETC

A maximum of four (4) aperture nodes may be input. Three (3) openings and three (3) closing times may be entered for each aperture.

The aperture open and close function is used to accomplish two purposes: first when the aperture is opened it changes the aperture node from a massless node, the temperature of which is dependent upon its radiative exchange with other instrument and quadrant nodes, to a specified temperature node at the temperature of the space environment. Basically this allows the instrument to simulate the effect of opening an aperture and allowing the interior to radiate out the aperture to the space environment. Secondly through the use of the NONFX tables, following; heat loads associated with opening an aperture or operation of a heat flux introducing device are applied to the nodes associated with the heat fluxes.

Four "aperture" nodes may be used for an instrument with up to 40 heat loads (QFLX) total, distributed as desired among the apertures with the following restriction: The order of input of the aperture data must correspond to the following order:

Instrument	Aperture No.	Measurement No.	Node No.	
HCO	1	K0299-703	800 (aperture)	
	2	Not dependent	800	any node number may be used
	3	" "	800	
	4	" "	800	

Apertures 2, 3 & 4 may be used for any function. The node number entered has no function or effect since it is not an actual aperture. The data entered in Item 13 controls.

Instrument	Aperture No.	Measurement No.	Node No.
HAO	1	Unknown	Unknown (aperture)
	2	(For HAO all apertures are from same measurement no.)	X same as aperture
	3		X
	4		X

HAO requires 4 aperture nodes for its aperture.

Instrument	Aperture No.	Measurement No.	Node No.	
NRL-B	1	K0244-82B	1401	XUV Mon Aperture
	2	M0301-82B	1494	Instrument Aperture Pointing Ref. System
	3	K0179-82B	1494	
	4	Not dependent	1494	

Actually for NRL-B apertures 1 & 2 need to be in this order but 3 & 4 can be used for any function. Normally 3 was used for PRS operation. The node number used for apertures 3 and 4 does not affect program operation. The data entered in Item 13 controls.

Instrument	Aperture No.	Measurement No.	Node No.	
NRL-A	1	K0214-82A	1025	Inst. aperture
	2	K0213-82A	1025	Used but ignored by program
	3	K0212-82A	1025	
	4	Not dependent	1025	

S082A "apertures" 2, 3 and 4 need not be in any special order but the order normally used is shown. Aperture 2 indicates short wave length mode operation and aperture 3 indicates long wave length operation. Four was never used.

If it is necessary to open an aperture to change the node to a space temperature specified temperature node but no heat fluxes due to solar or electronic loads are present; enter the node number and opening and closing times as usual in the aperture data of Item 12. Enter a 1 in NONFX(I) (Item 13), any node number in NOFX and a non-zero but very small heat flux in QFLX. This will allow the program to operate but will add an insignificant flux to the node entered in NOFX.

13.

5	10	15	20
NONFX(1)	NONFX(2)	NONFX(3)	NONFX(4)

NOTE: NONFX (I = 1,2,3) cannot be zero unless all subsequent are zero.

FORMAT: 4I5

NONFX (I) The number of nodes affected by the opening of the Ith aperture (or the turning on of a flux introducing device) refer to Item 12 above a maximum of 40 NONFX's may be input.

The following cards are necessary only if there is a non-zero NONFX

5	15
NOFX(I,J)	QFLX(I,J)

FORMAT: I5, F10.4

NOFX(I,J) The node number of Jth node affected by the Ith aperture (or other flux introducing device).

QFLX(I,J) The flux incident on the Jth node when the Ith aperture (or other flux introducing device) is opened (or turned on).

There will be $\sum$(NONFX (1) + NONFX (2) + NONFX (3) + NONFX (4)) cards in this set. All of the affected nodes for the first aperture are input first, then the second, etc. No data is required if NONFX (I) is zero. A maximum of 40 QFLX's may be input.

14.

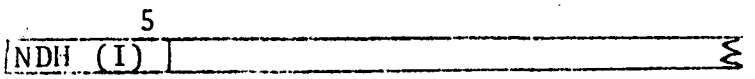

FORMAT I5

NDH (I) Node number of heaters (TCS) that have failed. The failed heater node numbers are input one per card in I5 format. These cards cause the program to ignore the heater data for the nodes entered in the nominal data deck. Applies to S082A, HCO (S-055) and HAO (S-052). S082B heater data is not entered in the nominal data deck.

The user inputs revised heater data in the next group of cards in the transient deck format. The final card of this group must be a 99999 card.

COMMENTS: The following explains the heater data input. Two cards per heater.

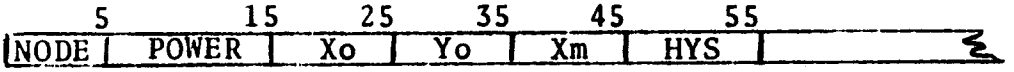

FORMAT (I5 5F10.3)

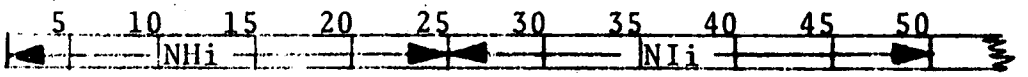

FORMAT (10I5)

NODE = Node number of TCS heater

POWER = Heater output power - BTU/Hr

Xo = Desired instrument case temp. F

Yo = Off temperature of heater F

X_m = Slope heater OFF/Setpoint curve

HYS = Number of degrees (F) between heater off and on points

NHi = Heater control nodes - The average temperature of these nodes (5) is used to control the heater OFF function.

NIi = Instrument control nodes - The average temperature of these nodes (up to 5) is used as the instrument reference temperature.

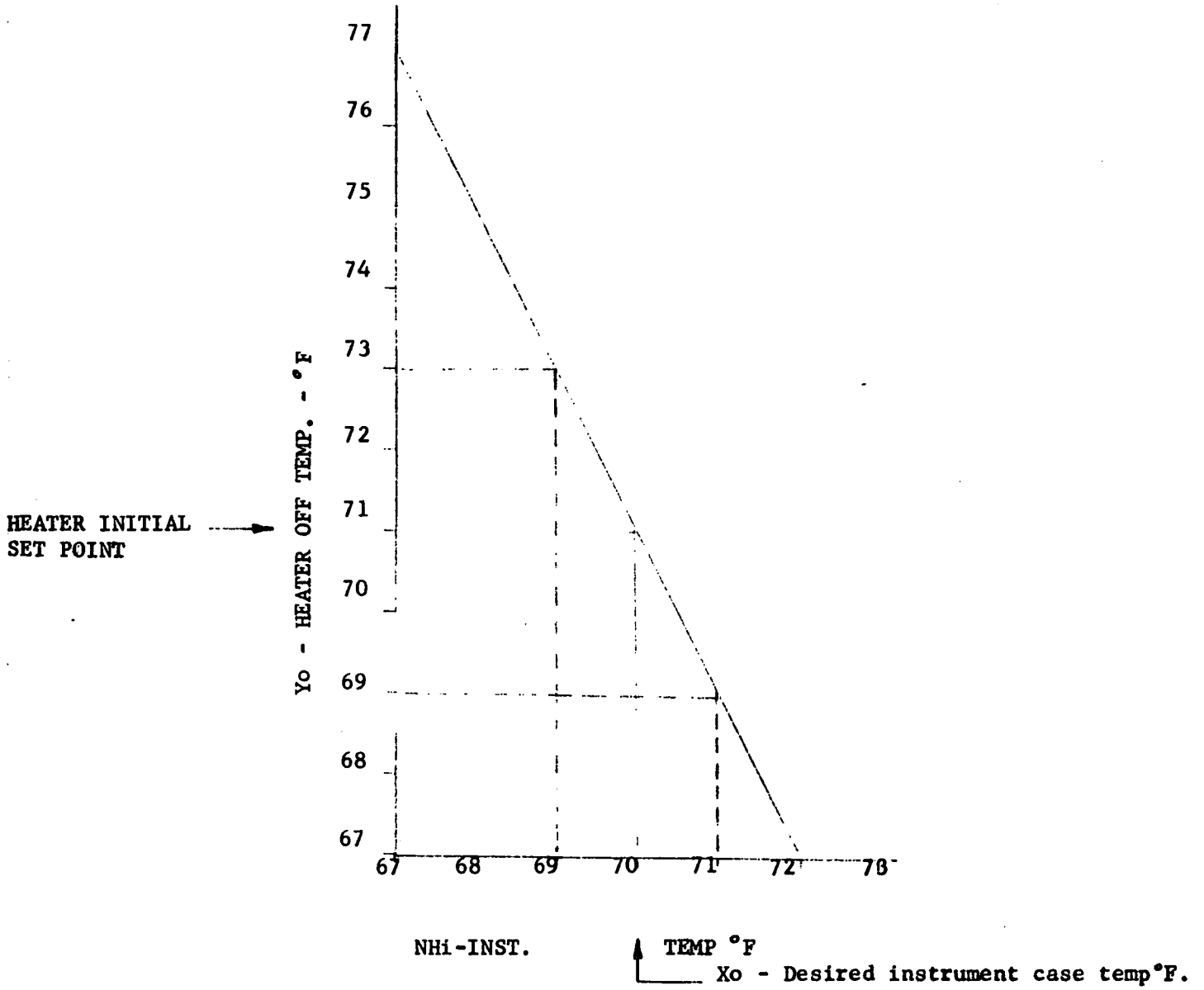

HEATER OPERATION NRL-B

Slope Xm is the slope of the straight line curve relating the heater OFF point temperature, Yo, to the instrument temperature (AVG) NHi. In the example, if the heater initial set point Yo = 71°F and the desired case temperature Xo = 70°F results

in a computed case temperature of 71°F, the heater set point is automatically reset to 69°F. If the computed case temperature is 69 = the heater off point temperature is reset to 73°F.

If the feed back system is not required, the slope, Xm, is set to zero. Resulting in a constant heater OFF temperature.

NOTES

There are two ways to handle heater nodes for which probes exist - only applies to S082B.

a. INDEX is input as zero in the nominal data deck. No heater data is input through the nominal data deck. (Nominal data deck input is discussed in Appendix B.)

   For a run that builds specified temperature tables from tape, no action is required.

   For a run that eliminates specified temperature table from tape, the heater data for the node must be input through the Thermal Distortion input data, as shown above.

b. INDEX is input as zero in the nominal data deck. Heater data is included in the nominal data deck. A listing of S082B heater data is included in Appendix B.

For a run that builds specified temperature tables from tape, the heater data must be eliminated. It can be eliminated by using the Thermal Distortion input "heater nodes that failed." The node number of the heater data to be eliminated is input as a heater node that failed, but no replacement table is input and the node becomes a computed temperature node with no heat input.

For a run that eliminates specified temperature from tape, no action is required.

15. The following provides a means of inputting the normal heat flux tables or altering them to meet some specific requirement.

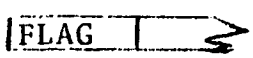

HEAT FLUX ADD-ON

FORMAT I5

FLAG = 1 Program ignores heat flux tables input in nominal data deck (transient thermal model) and reads flux table input by cards following flag card.

= 2 Program reads nominal data deck and fluxes input by cards following FLAG card. All flux tables are additive so that a nominal data deck flux table can be increased, by adding a flux table, decreased or eliminated by adding a negative flux table. A new flux table may be added.

Flux table input is identical to program transient input. i.e.

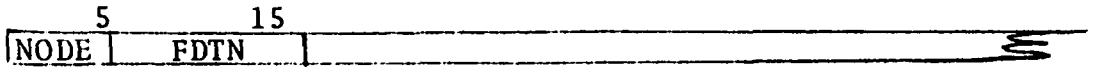

FORMAT I5, (F10.3)

NODE = Node number that receives flux

FDTN = Constant multiplier of flux table input.

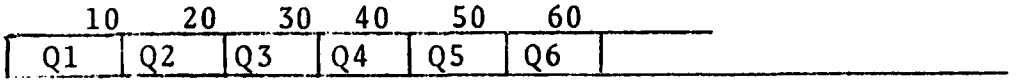

FORMAT 8 (F10.3)

Q1 = Flux value at time (I) from TYME table - BTU/Hr.

8 values per card NENT = Number of entries in time table

NENT = 61 for NRL A & B

Final card must be 99999 whether or not flux table is added.

16.

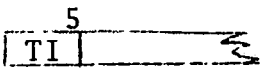

INITIAL TEMPERATURE

TI = 1 Initial temperatures from the nominal data deck are used.

= 2 Initial temperatures are input by cards following flag card.

Initial temperature input by card is identical to program transient i.e.

5	15	20	30	35	45	
N (1)	T (1)	N (2)	T (2)	N (3)	T (3)	ETC

FORMAT: 5 (I5, F10.3)

N (1) = Node number

If N (1) = 0 all non spec temp. nodes are given initial temperature equal to T (1).

T (1) = If N (1) ≠ 0 individual initial temperatures are input.

N (1) = Node number

T (1) = Temperature F - for node (1)

Final card of initial temperature data set must be 99999 if card input is used.

17. The final cards of the data deck are

@PMD,E

@FIN

18. An example of the deck setup for NRL-A run follows:

A. Fixed or Compressed Format User Tape

```
@PMD,F
@FIN
```

A. Fixed Format Drum Dump Tape

```
@RUN,//T NRLATD,1HNTSV140006,BBRCNABIN232,TT,PPP
@RUN,//T NRLATD,1HNTSV140006,BBRCNABIN232,TT,PPP
@MSG,IW BACKUP TAPES TO YYYYY ARE AAAAA,BBBBB.
@ASG,T PAR.,T,YYYYY
@REWIND PAR.
@FREE TPF$.
@ASG,T TPF$.,F2/1/POS/10
@ERS TPF$.
@COPIN PAR.,TPF$.
@FREE PAR.
@ASG,T 10.,F/1/POS/3
@ASG,T 11.,F/o/POS/3
@ASG,T 12.,F/1/POS/3
@ASG,T 13.,F/1/POS/3
@ASG,T ATM.,T,RRRRR
@ASG,T ATMF.,F//POS/100
@COPY,G ATM.,ATMF.
@FREE ATM.
@USE 14.,ATMF.
@ASG,T 15.,F/1/POS/3
@XQT ANRLA
```

Succeeding cards are input in accordance with Items 6 thru 18 above.

S082A
THERMAL DISTORTION ANALYSIS
COMPLETE INPUT DATA LISTING
DOY 333:21:15 RUN

```
         1         2         3         4         5         6         7         8
123456789012345678901234567890123456789012345678901234567890123456789012345678901234567890

MSG,IW BACKUP TAPES TO 11235 ARE 05323,36405
ASG,T PAR.,1,11235
REWIND PAR.
FREE TPF$.
ASG,T TPF$.,F2/1/POS/100
ERS TPF$.
COPIN PAR.,TPF$.
FREE PAR.
ASG,T 10.,F/1/POS/3
ASG,T 11.,F/1/POS/3
ASG,T 12.,F/1/POS/3
ASG,T 13.,F/1/POS/3
ASG,T 14.,T,13997
ASG,T 15.,F/1/POS/3
XQT ANRLA
 333   21   15    0    0    1    2    1    1
  NRL A FLIGHT DAY 147 19 30        5-30-73
  NRL A FLIGHT DAY 147 19 30        5-30-73
0.0       1.500      .0030       1.0        1.0      0.0333334
9999999999
  17    1   3.702
  18    1   3.702
  19    1    3.702
  20    1   3.702
  21    1   3.753
  22    1   3.753
  23    1   3.753
  24    1   3.753
  25    1   3.702
  26    1   3.702
  27    1   3.702
  28    1   3.702
  29    1   3.753
  30    1   3.753
  31    1   3.753
  32    1   3.753
  65
  66
  67
  68
  69
  70
  71
  72
  73
  74
  75
  76
  77
  78
  79
```

NOMINAL DATA DECK

ends with 88888 (PG 23) OF LIST

```
        1         2         3         4         5         6         7         8
12345678901234567890123456789012345678901234567890123456789012345678901234567890
  80                                                                          52
  81                                                                          53
 125    1                                                                     54
 126    1                                                                     55
 127    1                                                                     56
 128    1                                                                     57
 129    1                                                                     58
 130    1                                                                     59
 131    1                                                                     60
 132    1                                                                     61
 139                                                                          62
 145    1   1.350                                                             63
 146    1   1.600                                                             64
 153    1   1.350                                                             65
 154    1   1.000                                                             66
 301        0.0                                                               67
 302    0   0.09311                                                           68
 303    0   0.19105                                                           69
 304    0   0.18566                                                           70
 305    0   0.34545                                                           71
 306    0   0.21062                                                           72
 307    0   0.08389                                                           73
 308    0   0.05161                                                           74
 309    0   0.45069                                                           75
 310        0.49183                                                           76
 311        0.48017                                                           77
 312        0.45593                                                           78
 313    0   0.07227                                                           79
 314    0   0.17407                                                           80
 315    0   0.19809                                                           81
 316    0   0.59642                                                           82
 317    0   0.05376                                                           83
 318    0   0.29485                                                           84
 319    0   0.12755                                                           85
 320    0   0.08526                                                           86
 321    0   0.27450                                                           87
 322    0   0.15644                                                           88
 323        0.34669                                                           89
 324        0.53113                                                           90
 325        0.59825                                                           91
 326    0   0.15113                                                           92
 327    0   0.19233                                                           93
 328        0.55156                                                           94
 329        0.44643                                                           95
 330        0.64253                                                           96
 331    0   0.19546                                                           97
 332    0   0.27674                                                           98
 333    0   0.29557                                                           99
 334    0   0.61152                                                          100
 335    0   0.60050                                                          101
 336    0   0.43688                                                          102
 337    0   0.09209                                                          103
```

```
        1         2         3         4         5         6         7         8
12345678901234567890123456789012345678901234567890123456789012345678901234567890
```

338	0	0.17529	104
339	0	0.37840	105
340	0	0.60368	106
341	0	0.57499	107
342	0	0.23606	108
343	0	0.13663	109
344	0	0.05881	110
345	0	0.29777	111
346	0	0.17549	112
347	0	0.14598	113
348	0	0.03081	114
349	0	0.09460	115
350	0	0.36624	116
351	0	0.37389	117
352	0	0.33993	118
353	0	0.30222	119
354	0	1.17030	120
355	0	0.31554	121
356		0.75884	122
357		0.87219	123
358		0.74185	124
359	0	0.66076	125
360	0	0.20241	126
361		0.2436	127
362		0.719	128
363		0.159	129
364		0.751	130
365		0.267	131
370		0.147	132
371	0	0.11031	133
372	0	0.15451	134
373	0	0.17171	135
374	0	0.24031	136
375		.23210	137
376		.23210	138
377		2.61	139
378		.00406	140
379		.00406	141
380		.00812	142
381	0	0.13449	143
382	0	0.28179	144
383		0.129280	145
384		0.204000	146
385		4.500000	147
386		0.012640	148
387		0.129280	149
388		0.129280	150
389		0.203500	151
390		0.203500	152
391		0.090620	153
392		0.090620	154
393		0.0920	155

```
         1         2         3         4         5         6         7         8
123456789 0123456789 0123456789 0123456789 0123456789 0123456789 0123456789 0123456789 0

 394    0   0.09311
 395      .59
 396      .59
 397      1.45
 398      .25
 399      5.
 400       .25
 613    0  0.6910
 654    0  0.9833
 659    0  0.2998
1020      0.234
1021     0
1025
2001       0.1413
2002       0.1249
2003       0.1873
2004      0.1404
2005      0.1326
2006      0.1224
2007       0.1253
2008       0.1314
2009       0.1584
2010       0.1846
2301      0.0311
2302      0.0311
2303      0.0311
2304      0.0311
2305      0.0311
2306      0.0311
2307      0.0311
2308      0.0311
2309      3.6
3309     0
3310     0
3311     0
3312     0
3313     0
3354
3355
3356
3359     0
3400
5313
5381        .123
5382        .246
6001
6002
6003
6004
6005
6010
6011
```

```
         1         2         3         4         5         6         7         8
12345678901234567890123456789012345678901234567890123456789012345678901234567890

 6012                                                                                  208
 6013                                                                                  209
 6015                                                                                  210
 6016                                                                                  211
 6017                                                                                  212
 6018                                                                                  213
 7002                                                                                  214
 7003                                                                                  215
 7004                                                                                  216
 7005                                                                                  217
 7010                                                                                  218
 7011                                                                                  219
 7012                                                                                  220
 7013                                                                                  221
 7015                                                                                  222
 7016                                                                                  223
 7017                                                                                  224
 7018                                                                                  225
 7313                                                                                  226
 7354                                                                                  227
 7359                                                                                  228
 9000                                                                                  229
 9001                                                                                  230
 9002                                                                                  231
 9003                                                                                  232
 9004                                                                                  233
 9005    1                                                                             234
 9006                                                                                  235
9999999999                                                                             236
 1025   0.0       2.91667                                                              237
99999999999999                                                                         238
 2001     14.6      70.        73.5       0.        1.0                               239
 2001                       315  316  327  328                                         240
 2002     13.0      70.        73.5       0.        1.0                               241
 2001                       316  317  328  329                                         242
 2003     19.5      70.        71.5       0.        0.9                               243
 2003                       317  318  329  330                                         244
 2004     14.1      70.        71.5       0.        0.9                               245
 2004                       318  319  330  331                                         246
 2005     14.2      70.        73.5       0.        1.0                               247
 2005                       338  339  349  350                                         248
 2006     13.2      70.        73.5       0.        1.0                               249
 2005                       339  340  350  351                                         250
 2007     13.1      70.        71.5       0.        1.0                               251
 2007                       340  341  351  352                                         252
 2008     13.1      70.        71.5       0.        0.9                               253
 2008                       341  342  352  353                                         254
 2009     16.0      70.        72.5       0.        1.0                               255
 2009                       358                                                        256
 2010     17.2      70.        71.5       0.        0.9                               257
 2010                       357                                                        258
99999999999999                                                                         259
```

```
        1          2          3          4          5          6          7          8
12345678901234567890123456789012345678901234567890123456789012345678901234567890123456789
```

17	67.23460E-02	17	68.12620E-02	17	71.33380E-02	17	81.76700E-03	260
18	68.41350E-02	18	69.14070E-02	18	71.21720E-02	18	72.11660E-02	261
19	69.42940E-02	19	72.30700E-02	20	69.10020E-02	20	69.22830E-02	262
20	70.29510E-02	20	72.11300E-02	21	65.21640E-02	21	67.23020E-02	263
21	68.16940E-02	21	81.24400E-02	22	65.14080E-02	22	66.96500E-03	264
22	68.41350E-02	22	69.20100E-02	23	66.46050E-02	23	69.39140E-02	265
24	66.29870E-02	24	69.16500E-03	24	69.96000E-03	24	70.44060E-02	266
25	73.38160E-02	25	74.19370E-02	25	77.10690E-02	25	78.54200E-03	267
26	74.37440E-02	26	75.20100E-02	26	78.10480E-02	26	79.56200E-03	268
27	75.57550E-02	27	79.16110E-02	28	75.26670E-02	28	76.30900E-02	269
28	79.74600E-03	28	80.86400E-03	29	77.56520E-02	29	78.28690E-02	270
30	78.55430E-02	30	79.29750E-02	31	79.85190E-02	32	79.59470E-02	271
32	80.45710E-02	65	81.55600E-01	65	125.96990E 00	65	127.31300E-01	272
65	139.34490E-01	65	145.79130E-01	65	359.25190E-01	65	360.38380E-03	273
65	361.25100E-02	65	362.22280E-01	65	365.46650E-02	65	370.17320E-02	274
65	373.34010E-03	65	393.81750E-02	65	396.10350E-02	65	396.27650E-02	275
65	398.13540E-02	65	2009.15180E-01	65	2307.16910E-02	65	3359.86170E-01	276
65	6013.10560E 00	65	6015.36150E-02	65	6016.29830E-02	66	125.25560E 00	277
66	126.18600E 01	66	128.11850E 00	66	129.10820E 00	66	130.87680E-01	278
66	153.10590E 00	66	342.39020E-04	66	352.76230E-03	66	352.84110E-04	279
66	353.25450E-03	66	353.81220E-04	66	399.52480E-01	66	2008.13650E-03	280
66	2008.81500E-04	66	2010.34160E-01	66	2307.87370E-03	66	2308.21810E-02	281
66	2309.55350E-02	66	3355.14760E-01	66	3356.15350E 00	66	6010.53280E-01	282
66	6011.13150E 00	66	6012.13090E 00	67	73.85760E-01	67	77.34620E-01	283
67	81.15350E 00	67	125.32080E 00	67	127.13580E 00	67	139.52990E-01	284
67	145.20500E 00	67	146.16980E 00	67	301.24910E-01	67	302.96570E-04	285
67	303.21690E-02	67	314.95510E-03	67	361.94840E-02	67	362.27670E-01	286
67	363.32230E-02	67	373.13710E-02	67	396.11650E-02	67	396.14490E-01	287
67	397.65850E-01	67	398.86730E-02	67	400.49950E-02	67	1025.18390E-01	288
67	3400.29950E-01	67	6015.14280E-02	67	6016.52090E-02	67	6017.11390E-01	289
67	6018.29280E-01	67	9001.26910E 00	67	9005.81260E-01	68	304.15970E 00	290
68	305.56770E 00	68	306.63520E-02	68	313.65690E-03	68	324.94870E-02	291
68	325.75850E 00	68	326.18800E 00	68	335.91550E-02	68	336.74890E 00	292
68	337.15830E 00	68	347.26980E 00	68	348.50920E-01	68	359.91750E-03	293
68	7002.14040E 00	68	7003.31780E-02	68	7012.40140E-02	68	7013.13910E 00	294
68	7015.15960E-01	68	7016.41600E-01	68	7017.43500E-01	68	7018.32470E-01	295
68	7313.41390E-01	68	7313.55540E-01	68	7359.60800E-01	68	7359.25950E-01	296
69	305.67240E-02	69	306.41290E 00	69	307.17880E 00	69	308.57930E-01	297
69	322.23400E 00	69	323.50420E 00	69	324.68570E 00	69	325.99680E-02	298
69	333.26030E 00	69	334.68890E 00	69	335.82610E 00	69	336.92860E-02	299
69	344.78410E-01	69	345.19500E 00	69	346.27130E 00	69	347.30420E-02	300
69	354.13700E-01	69	7002.29560E-02	69	7003.13730E 00	69	7004.12940E 00	301
69	7005.68840E-01	69	7010.52140E-01	69	7011.12860E 00	69	7012.15870E 00	302
69	7013.29660E-02	69	7354.29600E-01	69	7354.30470E 00	69	7354.12790E-01	303
69	7354.28590E-01	69	7354.71330E-02	70	76.31950E 00	70	80.15200E 00	304
70	126.92890E 00	70	128.10280E 00	70	130.15210E 00	70	131.95080E-01	305
70	132.74410E-01	70	139.81650E-01	70	153.42430E 00	70	154.41890E 00	306
70	399.63650E-02	70	2309.50940E-02	70	3309.14460E-01	70	3354.35950E 00	307
70	3355.39640E-02	70	6010.67480E-02	70	9003.19520E 00	71	73.21080E 00	308
71	74.34420E 00	71	78.64260E-01	71	127.59710E-01	71	146.95860E-01	309
71	301.55900E-02	71	303.55510E-03	71	313.22640E-01	71	314.19180E-03	310
71	363.11950E-02	71	397.15620E-01	71	400.32100E-02	71	1025.64630E-02	311

```
        1           2           3           4           5           6           7           8
12345678901234567890123456789012345678901234567890123456789012345678901234567890123456789012345678
```

71	3312.20290E 00	71	3313.99570E-02	71	3400.58360E-01	71	5313.12060E 00	312
71	6001.91520E-02	71	6002.12340E 00	71	6018.33900E-02	71	9001.23400E 00	313
71	9002.53870E-01	71	9005.30780E 00	71	9006.35340E 00	72	75.82310E 00	314
72	79.12760E 00	72	132.67380E-01	72	3309.86880E-01	72	3310.21640E 00	315
72	3311.23520E 00	72	6003.11810E 00	72	6004.10920E 00	72	6005.57880E-01	316
72	9002.22320E 00	72	9003.48460E-01	72	9004.45120E-01	73	125.14360E 00	317
73	139.28520E-01	73	145.50010E-01	73	146.93340E-01	73	303.62630E-02	318
73	314.36500E-02	73	315.34680E-02	73	316.45920E-03	73	327.79190E-04	319
73	400.25810E-01	73	1025.60180E-02	73	2001.59280E-04	73	2002.22830E-05	320
73	3400.12490E 00	73	5313.10280E 00	73	6018.41650E-02	73	9001.19480E 00	321
73	9005.17310E 00	74	125.10360E 00	74	315.91090E-02	74	315.28390E-02	322
74	316.12050E-02	74	316.47170E-01	74	317.31250E-02	74	327.20790E-03	323
74	2001.15560E-03	74	2001.38900E-03	74	2002.28100E-03	74	2002.59970E-05	324
74	2003.30670E-04	74	3311.75110E-01	74	3312.51180E 00	74	3313.48610E-01	325
74	3400.22420E-01	74	5313.17910E 00	74	6001.66890E-02	74	6002.68570E-01	326
74	6003.12570E-01	74	9001.22090E 00	74	9002.82090E-01	74	9006.22180E 00	327
75	79.74030E-01	75	126.85730E-01	75	128.48170E-01	75	315.30290E-03	328
75	316.50320E-02	75	316.32580E-02	75	317.52160E-01	75	317.33340E-03	329
75	318.67130E-01	75	319.23100E-01	75	331.25640E-02	75	2001.41500E-04	330
75	2002.27110E-03	75	2002.29980E-04	75	2003.32720E-05	75	2003.27900E-03	331
75	2003.61130E-03	75	2004.41780E-03	75	2004.63060E-03	75	3309.41900E 00	332
75	3310.81360E 00	75	3311.71440E 00	75	3312.69570E-01	75	3354.49530E-01	333
75	6002.12560E-01	75	6003.13050E 00	75	6004.13950E 00	75	6005.71870E-01	334
75	9002.47210E 00	75	9003.11720E 00	76	126.21100E 00	76	130.31120E-01	335
76	131.28060E-01	76	153.10590E 00	76	154.23850E 00	76	319.42300E-02	336
76	319.25590E-03	76	331.17410E-03	76	331.26630E-02	76	331.46940E-03	337
76	342.29400E-03	76	342.16500E-02	76	353.20060E-03	76	2004.71760E-04	338
76	2004.76490E-04	76	2004.55640E-05	76	2008.49650E-04	76	3309.64830E-01	339
76	3354.25410E 00	76	6005.11490E-01	76	9003.81830E-01	77	127.41860E 00	340
77	146.18480E 00	77	301.30980E-02	77	315.58810E-02	77	316.51380E-03	341
77	327.88610E-05	77	363.81170E-03	77	371.12090E-03	77	395.19830E-02	342
77	400.16380E-01	77	1025.87680E-02	77	2001.66330E-04	77	2002.25550E-05	343
77	3400.88730E-02	77	9001.21140E 01	77	9005.62390E-01	78	125.14920E 00	344
78	127.11810E 01	78	315.22590E-01	78	315.60140E-02	78	316.99920E-01	345
78	316.29900E-02	78	316.10700E-02	78	317.17130E-01	78	317.66190E-02	346
78	327.51570E-03	78	2001.38610E-03	78	2001.82400E-03	78	2001.13450E-01	347
78	2002.89040E-04	78	2002.59590E-02	78	2002.59530E-03	78	2002.14870E-04	348
78	2003.64970E-04	78	2003.20070E-03	78	2005.30030E-02	78	2006.30660E-02	349
78	2301.25740E-02	78	3311.34930E-01	78	3312.19580E 00	78	3313.23880E-01	350
78	5313.53870E-01	78	6001.17040E-02	78	6002.12100E-01	78	9001.17350E 01	351
78	9002.32940E 00	78	9006.37330E-01	79	125.16130E 00	79	126.41950E 00	352
79	127.36150E 00	79	128.41290E-01	79	129.29040E 00	79	130.18410E 00	353
79	132.10890E 01	79	315.89930E-03	79	316.14940E-01	79	316.66540E-02	354
79	317.10650E-00	79	317.99980E-03	79	318.65670E-01	79	319.45400E-01	355
79	331.50380E-02	79	2001.12320E-03	79	2002.70920E-02	79	2002.89020E-04	356
79	2002.55360E-03	79	2003.27290E-03	79	2003.23060E-01	79	2003.12480E-02	357
79	2003.97150E-05	79	2004.61690E-03	79	2004.82100E-03	79	2004.17000E-01	358
79	2006.22430E-02	79	2007.44620E-02	79	2008.55100E-02	79	2303.51400E-02	359
79	2304.17780E-02	79	2305.42950E-02	79	2306.12300E-02	79	3309.66190E-01	360
79	3310.11140E 00	79	3311.18090E 00	79	3312.32360E-01	79	6003.13700E-01	361
79	6004.76710E-02	79	6005.36570E-02	79	9002.23280E 01	79	9003.83400E 00	362
79	9004.41640E 00	80	126.21030E 00	80	130.14520E 00	80	131.94370E-01	363

```
        1         2         3         4         5         6         7         8
12345678901234567890123456789012345678901234567890123456789012345678901234567890

  80  132.45210E 00   80  139.59320E-01   80  153.13060E 00   80  154.41820E 00   364
  80  319.11650E-01   80  319.64500E-03   80  331.40880E-03   80  331.12920E-02   365
  80  331.67120E-02   80  342.38750E-02   80  342.74120E-03   80  353.47120E-03   366
  80 2004.21060E-03   80 2004.13060E-04   80 2004.18080E-03   80 2004.27950E-02   367
  80 2008.11650E-03   80 2305.24100E-02   80 3309.19150E-01   80 3354.10180E 00   368
  80 9003.61500E 00   81  125.23050E 00   81  145.88160E-01   81  146.36610E-01   369
  81  301.87320E-02   81  302.37500E-03   81  303.10880E-01   81  314.19890E-02   370
  81  360.17600E-03   81  362.11700E 00   81  363.78920E-03   81  370.75870E-03   371
  81  373.38720E-02   81  393.17230E-02   81  396.31390E-01   81  396.56290E-02   372
  81  397.25950E-01   81  398.21090E-02   81  400.11690E-02   81 3359.19880E-01   373
  81 6015.16450E-01   81 6016.43960E-01   81 6017.42020E-01   81 6018.50410E-02   374
  81 9001.33740E-01  125  126.26170E 00  125  127.11890E 01  125  128.26490E-01   375
 125  129.10270E 00  125  139.25140E 01  125  145.10300E 01  125  146.30790E 00   376
 125  301.50130E-02  125  302.28420E-04  125  303.31480E-03  125  314.98500E-03   377
 125  315.71920E-02  125  315.65060E-03  125  316.95200E-03  125  327.16410E-03   378
 125  327.16910E-01  125  327.71210E-03  125  338.28410E-01  125  338.30950E-02   379
 125  349.43490E-01  125  349.30830E-02  125  349.13410E-02  125  350.22560E-00   380
 125  351.78930E-01  125  351.78930E-01  125  360.17790E-02  125  361.17570E-01   381
 125  362.17140E-01  125  363.84930E-03  125  364.85940E-01  125  365.21640E-01   382
 125  370.98230E-02  125  371.14490E-02  125  373.45970E-03  125  393.43970E-01   383
 125  395.33980E-01  125  395.18470E-00  125  396.22560E-01  125  396.53630E-01   384
 125  397.81050E-00  125  398.11830E-00  125  400.10780E-01  125 1025.17440E-01   385
 125 2001.12290E-03  125 2001.27080E-03  125 2001.19770E-01  125 2002.14290E-01   386
 125 2002.47340E-05  125 2003.75290E-02  125 2005.46870E-01  125 2005.18720E-02   387
 125 2005.41660E-03  125 2005.71120E-03  125 2006.24290E-03  125 2006.16340E-02   388
 125 2006.38410E-01  125 2006.24290E-03  125 2007.13090E-02  125 2007.13090E-02   389
 125 2007.91800E-02  125 2009.10850E 00  125 2010.30240E-01  125 2301.46490E-02   390
 125 2302.10110E-01  125 2307.26360E-01  125 2308.23230E-01  125 3359.49250E 00   391
 125 3400.99120E-02  125 6012.50350E-01  125 6013.16160E 00  125 6015.93960E-02   392
 125 6016.17180E-01  125 6017.10040E-01  125 6018.39460E-02  125 9001.15440E 01   393
 125 9002.44190E 00  125 9005.83330E-01  126  128.28130E 00  126  129.36520E 00   394
 126  130.28880E 00  126  131.67570E-01  126  132.25290E 00  126  139.24130E 01   395
 126  153.11370E 01  126  154.50550E 00  126  319.47760E-03  126  331.49710E-02   396
 126  331.78400E-03  126  342.61430E-02  126  342.54880E-03  126  342.74310E-02   397
 126  351.18960E-00  126  352.13240E-01  126  352.15480E-00  126  353.16490E-01   398
 126  353.40070E-01  126  353.90360E-03  126  399.81060E-01  126 2002.43790E-02   399
 126 2003.21440E-01  126 2004.25050E-04  126 2004.13390E-03  126 2004.15540E-01   400
 126 2006.58350E-03  126 2006.56690E-02  126 2007.30820E-01  126 2007.31440E-02   401
 126 2008.22350E-03  126 2008.27580E-01  126 2008.12830E-02  126 2008.27740E-02   402
 126 2010.93770E-01  126 2303.44120E-02  126 2304.81530E-02  126 2305.36760E-02   403
 126 2306.59490E-02  126 2307.84870E-03  126 2308.39400E-02  126 2309.13550E-01   404
 126 3354.28180E 00  126 3355.32720E-01  126 3356.41840E 00  126 6010.38650E-01   405
 126 6011.11200E 00  126 6012.14330E 00  126 9002.10500E 01  126 9003.82630E 00   406
 127  128.29250E-01  127  129.90830E-01  127  139.24640E 01  127  145.49840E 00   407
 127  146.46840E 00  127  301.38420E-02  127  302.13570E-03  127  314.30990E-02   408
 127  315.64480E-03  127  315.25410E-02  127  316.33640E-03  127  327.58010E-04   409
 127  327.16760E-01  127  327.39430E-03  127  338.45980E-03  127  338.15730E-01   410
 127  349.74280E-03  127  349.64590E-02  127  349.20000E-03  127  350.14630E-01   411
 127  360.83030E-03  127  361.25380E-02  127  364.51180E-01  127  365.24820E-02   412
 127  370.68200E-03  127  371.11510E-02  127  393.34290E-02  127  395.16460E-01   413
 127  395.14880E-00  127  397.24090E-00  127  398.42600E-01  127 1025.49310E-02   414
 127 2001.43430E-04  127 2001.26840E-03  127 2001.30810E-01  127 2002.16730E-05   415
```

```
        1           2           3           4           5           6           7           8
12345678901234567890123456789012345678901234567890123456789012345678901234567890123456789012345678
 127 2002.29390E-01  127 2003.16400E-01  127 2005.23070E-03  127 2005.41710E-01          416
 127 2005.10560E-03  127 2005.12140E-03  127 2006.33500E-01  127 2006.10600E-03          417
 127 2006.10600E-03  127 2007.13180E-01  127 2301.67280E-02  127 2302.12700E-01          418
 127 2303.12380E-02  127 2304.11300E-02  127 3359.23680E-01  127 9000.15360E-02          419
 127 9001.38330E 01  127 9002.10970E 01  127 9004.14480E 00  128  129.43320E-01          420
 128  139.91680E-01  128  153.95390E-01  128  154.74070E-01  128  319.10950E-03          421
 128  331.11400E-02  128  331.17820E-03  128  342.98070E-03  128  342.16890E-02          422
 128  342.12590E-03  128  351.11570E-01  128  352.21130E-02  128  352.17990E-01          423
 128  353.20540E-03  128  353.63960E-02  128  353.19170E-02  128  399.48350E-02          424
 128 2003.88740E-02  128 2004.30720E-04  128 2004.58440E-02  128 2004.56950E-05          425
 128 2006.35620E-04  128 2007.81830E-02  128 2007.19190E-03  128 2008.93930E-02          426
 128 2008.20480E-03  128 2008.32240E-03  128 2008.50820E-04  128 2303.17650E-02          427
 128 2304.28570E-02  128 2305.13810E-02  128 2306.22580E-02  128 2309.88520E-03          428
 128 3354.30170E-01  128 3355.15330E-02  128 9002.19950E 00  128 9003.11390E 00          429
 129  139.12590E 00  129  153.45260E-01  129  342.33090E-03  129  351.13020E-01          430
 129  352.17370E-01  129  352.71330E-03  129  353.21580E-02  129  353.18510E-02          431
 129  399.45250E-02  129 2002.58630E-02  129 2003.26850E-01  129 2004.61560E-02          432
 129 2006.63920E-02  129 2006.40090E-04  129 2007.21460E-01  129 2007.21600E-03          433
 129 2008.31130E-03  129 2008.69110E-04  129 2008.17300E-01  129 2303.50900E-02          434
 129 2304.84040E-02  129 2306.10450E-02  129 9002.10490E 01  129 9003.81350E-01          435
 129 9004.98050E-01  130  139.11960E 00  130  153.14040E 00  130  154.16200E 00          436
 130  319.21660E-03  130  331.36280E-03  130  331.22560E-02  130  342.34380E-02          437
 130  342.14310E-02  130  342.24910E-03  130  352.30840E-02  130  352.14770E-01          438
 130  353.93340E-02  130  353.15740E-02  130  353.41810E-03  130  399.58940E-02          439
 130 2004.60810E-04  130 2004.80280E-02  130 2004.11590E-04  130 2008.26470E-03          440
 130 2008.13980E-01  130 2008.10340E-03  130 2008.29890E-03  130 2304.14350E-02          441
 130 2305.30540E-02  130 2306.58530E-02  130 2309.12450E-02  130 3354.51970E-01          442
 130 3355.17370E-02  130 9002.17530E 00  130 9003.66470E 00  131  139.79760E-01          443
 131  153.15060E 00  131  154.16470E 00  131  319.11320E-03  131  331.11780E-02          444
 131  331.19430E-03  131  342.18420E-02  131  342.13010E-03  131  342.29160E-03          445
 131  352.62840E-03  131  353.22400E-03  131  353.19010E-02  131 2004.31760E-04          446
 131 2004.62120E-05  131 2008.55430E-04  131 2008.60900E-04  131 2306.79100E-03          447
 131 3354.34180E-01  131 9003.63270E-01  132  139.20480E 01  132  154.45540E 00          448
 132 2007.40100E-02  132 2304.71630E-03  132 9002.10600E 01  132 9003.66400E 00          449
 132 9004.34040E 00  139  145.63950E 00  139  146.14420E 01  139  153.55880E 00          450
 139  154.12520E 01  139  351.68750E-03  139  360.15760E-03  139  361.24960E-02          451
 139  365.17250E-02  139  370.10230E-02  139  393.60290E-02  139  395.14120E-02          452
 139  397.15840E-01  139  398.35510E-02  139  399.40520E-02  139 1025.22550E-01          453
 139 2006.21150E-04  139 2007.11400E-03  139 2009.11380E-01  139 2010.79470E-02          454
 139 2307.31730E-02  139 2308.34550E-02  139 3356.18650E-01  139 3359.58360E-01          455
 139 9000.25610E-02  139 9001.40080E 00  139 9003.15370E 00  139 9004.29590E-01          456
 139 9005.32230E-01  145  146.10100E 00  145  301.46390E-02  145  302.23020E-03          457
 145  303.45000E-02  145  314.48180E-02  145  315.26540E-03  145  315.29140E-02          458
 145  316.38570E-03  145  327.66530E-04  145  327.20620E-03  145  327.68980E-02          459
 145  338.20870E-03  145  338.62280E-02  145  349.38840E-03  145  349.29320E-02          460
 145  360.12710E-02  145  361.27170E-01  145  362.72530E-02  145  364.14200E-01          461
 145  370.43110E-03  145  371.47790E-02  145  373.36330E-02  145  393.27370E-02          462
 145  395.42480E-02  145  395.85460E-03  145  396.22270E-02  145  396.10960E-02          463
 145  397.74370E-01  145  398.11980E-01  145  400.13300E-01  145 2001.11050E-03          464
 145 2001.49810E-04  145 2002.19180E-05  145 2005.47950E-04  145 2005.12060E-03          465
 145 2302.69610E-03  145 3359.18050E-01  145 6015.43970E-02  145 6016.10020E-01          466
 145 6017.79210E-02  145 6018.52260E-02  145 9000.31280E-02  145 9001.32980E 00          467
```

1	2	3	4	5	6	7	8	
145	9005.46670E-01	146	301.15670E-01	146	302.51150E-03	146	303.73560E-02	468
146	314.10350E-01	146	315.42270E-02	146	315.16750E-03	146	316.55960E-03	469
146	327.96510E-04	146	327.50040E-04	146	327.43540E-02	146	338.19960E-02	470
146	349.94260E-04	146	361.26010E-02	146	363.15440E-02	146	371.25490E-02	471
146	373.32270E-02	146	395.17410E-02	146	395.27200E-03	146	396.14080E-02	472
146	397.26960E-01	146	398.32480E-02	146	400.63990E-01	146	1025.27110E-02	473
146	2001.72240E-04	146	2001.69760E-04	146	2002.27830E-05	146	2005.29270E-04	474
146	6015.74680E-03	146	6016.22390E-02	146	6017.55720E-02	146	6018.64370E-02	475
146	9000.30490E-01	146	9001.38080E 00	146	9005.19690E 00	153	319.58730E-03	476
153	331.89280E-03	153	331.61120E-02	153	342.67490E-03	153	342.10470E-02	477
153	342.84620E-02	153	352.22560E-02	153	352.51370E-02	153	353.10290E-02	478
153	353.68290E-02	153	353.54730E-03	153	399.69230E-02	153	2004.16470E-03	479
153	2004.26530E-04	153	2008.92040E-04	153	2008.25460E-03	153	2008.21860E-03	480
153	2305.79760E-03	153	2306.10320E-02	153	2309.43740E-02	153	3354.21320E 00	481
153	3355.32940E-02	153	6010.67780E-02	153	9003.21490E 00	154	319.43450E-02	482
154	319.10760E-02	154	331.48220E-03	154	331.11200E-01	154	331.11550E-02	483
154	342.65640E-03	154	342.10950E-01	154	342.12370E-02	154	352.14190E-02	484
154	353.42940E-02	154	353.13320E-02	154	2004.78570E-04	154	2004.30190E-03	485
154	2004.36930E-04	154	2008.32960E-03	154	2008.13750E-03	154	2305.10010E-02	486
154	2306.13710E-02	154	2309.18710E-02	154	3354.29410E 00	154	9003.34690E 00	487
301	302.19520E-04	301	304.17390E-01	301	305.85380E-02	301	312.11710E-01	488
301	313.31610E-01	301	314.19100E-03	301	315.16410E-01	301	316.84990E-02	489
301	325.69800E-02	301	326.75890E-02	301	327.74180E-02	301	328.71130E-02	490
301	336.28290E-02	301	339.42530E-02	301	358.62110E-02	301	363.46030E-02	491
301	397.63550E-02	301	400.94630E-03	301	9001.22930E-01	301	9005.41220E-02	492
302	304.42900E-02	302	305.19670E-02	302	313.16760E-01	302	315.40740E-02	493
302	316.19610E-02	302	325.12660E-02	302	326.83890E-03	302	327.84340E-03	494
302	328.12960E-02	302	358.13590E-02	302	397.29870E-04	302	9001.63900E-04	495
302	9005.10130E-04	303	304.31290E-01	303	312.66230E-02	303	313.22560E-01	496
303	315.57380E-02	303	316.62310E-02	303	326.56340E-02	303	327.32340E-02	497
303	328.52990E-02	303	339.26540E-02	303	358.42400E-02	303	397.16420E-03	498
303	3400.45780E-03	303	9001.73980E-03	303	9005.34960E-03	304	305.26440E-02	499
304	312.13430E-01	304	313.52010E-01	304	314.63760E-02	304	315.25940E-01	500
304	316.17870E-01	304	325.33760E-02	304	327.15250E-01	304	328.13760E-01	501
304	336.32990E-02	304	339.58010E-02	304	358.53330E-02	304	371.18670E-02	502
304	373.25920E-02	304	394.99440E-03	304	7002.25900E-02	304	7017.23970E-02	503
304	7018.21050E-01	304	7313.26590E-01	305	312.21280E 00	305	313.14060E-01	504
305	314.68570E-02	305	315.17970E-01	305	316.15050E 00	305	317.19020E-01	505
305	325.16030E-01	305	325.12100E-01	305	326.29860E-02	305	327.13590E-01	506
305	328.10170E 00	305	329.17900E-01	305	336.11730E-01	305	337.24850E-02	507
305	338.51390E-02	305	339.33500E-01	305	340.10470E-01	305	347.42310E-02	508
305	348.80070E-03	305	350.71630E-02	305	357.12320E-01	305	358.20510E-01	509
305	371.34140E-02	305	372.28620E-02	305	373.23050E-02	305	381.25150E-02	510
305	382.61170E-02	305	383.10500E-03	305	387.20020E-03	305	394.68820E-03	511
305	1021.61590E-03	305	7002.93950E-01	305	7013.33240E-02	305	7016.10060E-02	512
305	7017.15510E-02	305	7018.14910E-02	305	7313.24210E-02	305	7359.56450E-03	513
306	311.19340E 00	306	316.18750E-01	306	317.10560E 00	306	318.69640E-02	514
306	324.10730E-01	306	324.13890E-01	306	328.15640E-01	306	329.90370E-01	515
306	330.10190E-01	306	335.12410E-01	306	340.37450E-01	306	351.77800E-02	516
306	357.28550E-01	306	7003.87200E-01	306	7012.36830E-02	307	310.10720E 00	517
307	317.69490E-02	307	318.28320E-01	307	323.68350E-02	307	323.50300E-02	518
307	329.91620E-02	307	330.44100E-01	307	334.61070E-02	307	334.56040E-02	519

1	2	3	4	5	6	7	8	
123456789	0123456789	0123456789	0123456789	0123456789	0123456789	0123456789	0123456789	0
307	340.64690E-02	307	341.23460E-01	307	356.16140E-01	307	357.59790E-02	520
307	389.17060E-03	307	7004.64770E-01	308	309.40020E-01	308	319.53510E-02	521
308	320.53970E-02	308	321.87830E-02	308	322.19050E-02	308	330.49570E-02	522
308	331.12000E-01	308	332.24840E-02	308	333.16500E-02	308	341.30890E-02	523
308	342.46950E-02	308	355.34340E-02	308	356.27580E-02	308	390.28390E-02	524
308	2004.17000E-01	308	7005.28940E-01	308	7354.16410E-02	308	7354.33980E-02	525
309	319.40100E-01	309	320.32590E-01	309	321.57050E-01	309	322.65780E-01	526
309	323.15400E-01	309	330.15140E-01	309	331.65290E-01	309	332.25640E-01	527
309	333.25140E-01	309	334.18270E-01	309	341.17960E-01	309	342.25720E-01	528
309	343.64850E-02	309	344.59840E-02	309	345.45080E-02	309	352.46530E-02	529
309	353.63990E-02	309	355.45230E-01	309	356.37140E-01	309	389.42120E-03	530
309	390.21590E-01	309	391.38510E-02	309	392.34930E-02	309	3309.19080E-01	531
310	318.10700E 00	310	321.87420E-02	310	322.12980E-01	310	323.13140E 00	532
310	324.16570E-01	310	329.16320E-01	310	330.12920E 00	310	331.12870E-01	533
310	332.55110E-02	310	333.11800E-01	310	334.72390E-01	310	335.18550E-01	534
310	340.18330E-01	310	341.72410E-01	310	342.12030E-01	310	343.37980E-02	535
310	344.35710E-02	310	345.17240E-01	310	352.17360E-01	310	353.39140E-02	536
310	355.28190E-01	310	356.14730E 00	310	357.53160E-01	310	389.91790E-03	537
310	391.51810E-02	310	392.58420E-02	310	3310.34080E-01	311	316.11360E-01	538
311	317.19270E 00	311	324.11950E 00	311	325.17480E-01	311	328.17680E-01	539
311	329.11770E 00	311	334.12870E-01	311	335.59860E-01	311	336.12850E-01	540
311	335.14370E-01	311	340.59190E-01	311	341.12880E-01	311	346.17000E-01	541
311	350.48300E-02	311	351.17000E-01	311	356.39660E-01	311	357.14340E 00	542
311	358.35510E-01	311	385.25500E-02	311	387.46630E-03	311	3311.36280E-01	543
312	313.55190E-02	312	314.72030E-02	312	315.13290E-01	312	316.20910E 00	544
312	317.99030E-02	312	324.16890E-01	312	325.93380E-01	312	326.13050E-01	545
312	327.13100E-01	312	328.94810E-01	312	329.16470E-01	312	335.14770E-01	546
312	336.36890E-01	312	337.68860E-02	312	338.70060E-02	312	339.42700E-01	547
312	340.14560E-01	312	347.10550E-01	312	348.21330E-02	312	349.21490E-02	548
312	350.12460E-01	312	357.51050E-01	312	358.94730E-01	312	359.17650E-01	549
312	360.23290E-02	312	371.59550E-02	312	372.68400E-02	312	373.86050E-02	550
312	374.91560E-02	312	381.73580E-02	312	382.13730E-01	312	383.33830E-03	551
312	385.48570E-02	312	396.10620E-02	312	387.70180E-03	312	394.12200E-02	552
312	1021.15680E-02	312	3312.36800E-01	313	314.24640E-01	313	315.51350E-01	553
313	316.13830E-01	313	325.13470E-01	313	326.14680E-01	313	327.14680E-01	554
313	328.13670E-01	313	336.70860E-02	313	337.42180E-02	313	338.42540E-02	555
313	339.80750E-02	313	358.22100E-01	313	359.94360E-02	313	360.88670E-03	556
313	371.54670E-02	313	373.50680E-02	313	381.28370E-02	313	382.52750E-02	557
313	394.13140E-02	313	1021.60560E-03	313	3313.11840E-01	313	7313.2059 0E 00	558
314	315.32520E-01	314	325.57040E-02	314	326.35310E-02	314	327.61810E-02	559
314	336.22590E-02	314	358.45920E-02	314	397.21770E-03	314	3400.52520E-03	560
314	9001.22080E-02	314	9005.37760E-03	315	325.13550E-01	315	326.15070E-01	561
315	336.49950E-02	315	337.36030E-02	315	358.52570E-02	315	371.14850E-02	562
315	373.27290E-02	315	394.95120E-03	315	2001.10790E 00	315	2001.21360E-03	563
315	9001.47940E-02	315	9001.24890E-03	315	9001.91800E-04	315	9002.11030E-03	564
316	324.18040E-01	316	325.99790E-01	316	326.13350E-01	316	328.17420E-01	565
316	336.26700E-01	316	337.50090E-02	316	339.11360E-01	316	347.60940E-02	566
316	357.12340E-01	316	358.21410E-01	316	371.13680E-02	316	373.47910E-02	567
316	374.37020E-02	316	381.31670E-02	316	382.44230E-02	316	383.35750E-03	568
316	385.19710E-02	316	387.19940E-03	316	394.68620E-03	316	1021.61820E-03	569
316	2001.23440E-03	316	2001.23860E 00	316	2002.17070E-03	316	2002.20960E 00	570
316	9001.63470E-03	316	9001.41350E-02	316	9002.18330E-02	316	9002.33140E-03	571

```
        1           2           3           4           5           6           7           8
123456789012345678901234567890123456789012345678901234567890123456789012345678901234567890
```

316	9004.57660E-04	317	324.91400E-01	317	325.15650E-01	317	329.13700E-01	572
317	335.37740E-01	317	346.77590E-02	317	357.28530E-01	317	2002.15780E-03	573
317	2002.94100E-01	317	2003.19670E 00	317	2003.35700E-03	317	9001.27390E-03	574
317	9002.12140E-03	317	9002.53050E-02	317	9004.92310E-03	318	323.44750E-01	575
318	324.92830E-02	318	330.67140E-02	318	334.23410E-01	318	335.65290E-02	576
318	341.55960E-02	318	356.16120E-01	318	357.59700E-02	318	389.17200E-03	577
318	2003.22000E-01	318	2003.12200E-03	318	2004.27520E-03	318	9002.89730E-02	578
318	9003.11220E-02	319	320.54070E-02	319	321.87920E-02	319	322.12120E-01	579
319	323.50480E-02	319	332.24840E-02	319	333.46020E-02	319	334.50950E-02	580
319	355.32200E-02	319	356.27640E-02	319	390.28180E-02	319	2004.22160E-03	581
319	3354.31160E-04	319	9002.44630E-03	319	9003.21040E-02	319	9003.10650E-03	582
320	322.82620E-02	320	323.17170E-02	320	330.16870E-02	320	331.83510E-02	583
320	333.22840E-02	320	342.24270E-02	320	354.23100E-01	320	355.28640E-02	584
320	390.60390E-02	320	7354.57740E-01	321	322.57330E-01	321	331.57830E-01	585
321	333.15550E-01	321	342.16720E-01	321	354.12420E 00	321	355.13620E-01	586
321	356.61200E-02	321	390.51700E-01	321	7354.13820E 00	322	330.13350E-01	587
322	331.36360E-01	322	332.15240E-01	322	333.65820E-02	322	341.12580E-01	588
322	342.24480E-01	322	343.29050E-02	322	344.19750E-02	322	353.36730E-02	589
322	355.14060E-01	322	356.10070E-01	322	389.38390E-03	322	390.14470E-01	590
322	391.90810E-02	322	7005.19370E-01	322	7010.23890E-02	322	7354.50740E-03	591
322	7354.17430E-01	322	7354.18950E-02	322	7354.29080E-02	323	329.18680E-01	592
323	330.10900E 00	323	331.13590E-01	323	334.16790E-01	323	334.14180E-01	593
323	340.17470E-01	323	341.87570E-01	323	342.11410E-01	323	345.48190E-02	594
323	352.16240E-01	323	356.49300E-01	323	357.13500E-01	323	389.60220E-03	595
323	391.26890E-02	323	392.30290E-02	323	7004.27290E-01	323	7005.19930E-02	596
323	7011.58260E-02	323	7354.98800E-04	324	328.25700E-01	324	329.16990E 00	597
324	330.18640E-01	324	335.20460E-01	324	335.18170E-01	324	339.17520E-01	598
324	340.11750E 00	324	341.17660E-01	324	346.68760E-02	324	351.24300E-01	599
324	352.44290E-02	324	357.64880E-01	324	387.21350E-03	324	7003.15780E-01	600
324	7012.76450E-02	325	326.37980E-02	325	326.39660E-02	325	327.21780E-01	601
325	328.18120E 00	325	329.25190E-01	325	336.15600E-01	325	336.18180E-01	602
325	337.33300E-02	325	338.13050E-01	325	339.99820E-01	325	340.20590E-01	603
325	347.57040E-02	325	347.48820E-02	325	348.10750E-02	325	349.26870E-02	604
325	350.19370E-01	325	357.17460E-01	325	358.35130E-01	325	359.75210E-02	605
325	360.10320E-02	325	371.49460E-02	325	372.55810E-02	325	373.36910E-02	606
325	374.37010E-02	325	381.50570E-02	325	382.11020E-01	325	383.18280E-03	607
325	384.38410E-01	325	385.31440E-02	325	386.56580E-03	325	387.42650E-03	608
325	394.76620E-03	325	1021.11770E-02	325	7002.11230E-01	325	7013.60850E-02	609
325	7015.51940E-03	325	7016.19710E-02	325	7017.25010E-02	325	7018.13270E-02	610
325	7313.17230E-02	325	7359.88920E-03	326	327.26970E-01	326	328.21830E-01	611
326	336.38940E-02	326	338.12900E-01	326	339.14270E-01	326	347.14100E-02	612
326	349.21000E-02	326	358.93080E-02	326	359.52890E-02	326	371.32680E-02	613
326	372.25090E-02	326	373.29020E-01	326	374.35740E-02	326	381.90190E-02	614
326	382.87630E-02	326	394.11920E-02	326	1021.14200E-02	326	7002.15650E-02	615
326	7015.24180E-02	326	7017.25570E-01	326	7018.17500E-02	326	7313.16350E-02	616
327	328.41690E-02	327	336.12540E-01	327	337.12890E-01	327	348.20940E-02	617
327	358.93440E-02	327	359.53450E-02	327	371.22850E-01	327	372.22490E-02	618
327	373.50280E-02	327	374.34720E-02	327	381.49380E-02	327	382.18440E-01	619
327	394.11390E-02	327	1021.13520E-02	327	2001.14010E-03	327	2001.11620E 00	620
327	2005.25400E-01	327	9001.34040E-04	327	9001.10940E-03	327	9001.23850E-02	621
328	335.21420E-01	328	336.87660E-01	328	337.13180E-01	328	339.26860E-01	622
328	347.21940E-01	328	348.29400E-02	328	350.69110E-02	328	357.18550E-01	623

1	2	3	4	5	6	7	8	
123456789	0123456789	0123456789	0123456789	0123456789	0123456789	0123456789	0	
328	358.44340E-01	328	359.81140E-02	328	360.11470E-02	328	371.22360E-02	624
328	372.25480E-02	328	373.71590E-02	328	374.79720E-02	328	381.61250E-02	625
328	382.92240E-02	328	383.16550E-02	328	384.43070E-02	328	385.63610E-02	626
328	386.81670E-03	328	387.51030E-03	328	394.78380E-03	328	1021.12480E-02	627
328	2001.30260E 00	328	2002.26580E 00	328	2005.74600E-01	328	2006.65500E-01	628
329	334.17390E-01	329	335.11710E 00	329	336.15190E-01	329	340.17710E-01	629
329	345.43370E-02	329	346.23940E-01	329	356.13090E-01	329	357.63890E-01	630
329	387.21030E-03	329	2002.13880E 00	329	2003.51380E 00	329	2006.20300E-01	631
330	333.10880E-01	330	334.86070E-01	330	335.17370E-01	330	341.13940E-01	632
330	345.15860E-01	330	356.48480E-01	330	357.13280E-01	330	389.59310E-03	633
330	391.29710E-02	330	392.27590E-02	330	2003.14000E 00	330	2004.31000E 00	634
330	2008.52000E-02	331	342.15110E-01	331	343.23400E-01	331	334.12610E-01	635
331	343.29110E-02	331	344.44550E-02	331	355.15060E-01	331	356.99900E-02	636
331	389.36250E-03	331	390.13890E-01	331	392.51110E-02	331	2004.26320E-03	637
331	2004.20730E 00	331	3354.35330E-04	331	3354.32430E-03	331	9002.49520E-04	638
331	9003.25350E-03	331	9003.10280E-03	331	9003.11080E-02	332	333.38450E-01	639
332	342.39760E-01	332	344.87300E-02	332	353.94570E-02	332	354.12740E 00	640
332	355.32480E-01	332	356.10950E-01	332	390.27300E-01	332	391.59170E-02	641
332	392.59980E-02	332	7354.13690E 00	333	341.18890E-01	333	342.33490E-01	642
333	343.13290E-01	333	344.24440E-02	333	352.65450E-02	333	353.13030E-01	643
333	355.42530E-01	333	356.13920E-01	333	389.36840E-03	333	390.11020E-01	644
333	391.17620E-01	333	392.39940E-02	333	7005.42220E-02	333	7010.98810E-02	645
333	7354.18220E-01	333	7354.34250E-03	333	7354.29490E-02	333	7354.29970E-02	646
334	340.28050E-01	334	341.17050E 00	334	342.19410E-01	334	343.34450E-02	647
334	345.71400E-02	334	345.85910E-02	334	351.93080E-02	334	352.54090E-01	648
334	353.73720E-02	334	355.17380E-01	334	356.14500E 00	334	357.18580E-01	649
334	389.73470E-03	334	391.92710E-02	334	392.69080E-02	334	7004.92480E-02	650
334	7010.17900E-02	334	7011.27890E-01	334	7354.27450E-03	334	7354.40810E-03	651
334	7354.54950E-03	335	339.28050E-01	335	340.22470E 00	335	341.28390E-01	652
335	346.12420E-01	335	346.88870E-02	335	350.84040E-02	335	351.79340E-01	653
335	352.95200E-02	335	356.17240E-01	335	357.18370E 00	335	358.12280E-01	654
335	387.32720E-03	335	7003.71970E-02	335	7012.32150E-01	336	337.33340E-02	655
336	338.18710E-01	336	339.16590E 00	336	340.25320E-01	336	347.86830E-02	656
336	347.61710E-02	336	348.11080E-02	336	349.66600E-02	336	350.50580E-01	657
336	351.10480E-01	336	357.20690E-01	336	358.11280E 00	336	359.13960E-01	658
336	360.21000E-02	336	371.29260E-02	336	372.78170E-02	336	373.22810E-02	659
336	374.64370E-02	336	381.59160E-02	336	382.11800E-01	336	383.19080E-03	660
336	384.85900E-01	336	385.33900E-01	336	386.29330E-02	336	387.85490E-03	661
336	388.26070E-02	336	394.83130E-03	336	1021.13570E-02	336	7002.48930E-02	662
336	7013.23360E-01	336	7015.10640E-02	336	7016.30200E-02	336	7017.17150E-02	663
336	7018.88750E-03	336	7313.11910E-02	336	7359.17640E-02	337	338.21290E-01	664
337	339.20530E-01	337	349.64550E-02	337	350.78660E-02	337	358.11300E-01	665
337	359.16660E-01	337	360.22880E-02	337	371.14690E-02	337	372.45490E-02	666
337	373.28580E-02	337	374.65690E-01	337	381.93660E-02	337	382.89910E-02	667
337	386.64950E-03	337	1021.14760E-02	337	7013.18890E-02	337	7015.17720E-02	668
337	7016.24080E-01	337	7017.15490E-02	337	7359.25760E-02	338	339.40700E-02	669
338	347.81040E-02	338	348.65000E-02	338	358.13120E-01	338	359.16840E-01	670
338	360.23140E-02	338	371.17030E-02	338	372.29850E-01	338	373.21990E-02	671
338	374.66000E-02	338	381.51170E-02	338	382.19140E-01	338	386.65950E-03	672
338	1021.14140E-02	338	2005.12460E-03	338	2005.11800E 00	338	9001.13580E-02	673
338	9001.24670E-04	339	346.11220E-01	339	347.54860E-01	339	348.70670E-02	674
339	350.11460E-01	339	357.22350E-01	339	358.12230E 00	339	359.14660E-01	675

```
        1         2         3         4         5         6         7         8
12345678901234567890123456789012345678901234567890123456789012345678901234567890

339  360.22380E-02  339  371.15600E-02  339  372.43510E-02  339  373.50600E-02  676
339  374.12140E-01  339  381.71020E-02  339  382.11200E-01  339  383.22400E-02  677
339  384.54210E-02  339  385.11580E-01  339  386.31000E-02  339  387.10360E-02  678
339  388.28320E-02  339  394.39060E-03  339 1021.14770E-02  339 2005.34790E 00  679
339 2006.30560E 00  340  345.93590E-02  340  346.78450E-01  340  347.83950E-02  680
340  351.12280E-01  340  356.17040E-01  340  357.18160E 00  340  358.12150E-01  681
340  385.23050E-02  340  387.32390E-03  340 2003.13360E 00  340 2006.16280E 00  682
340 2007.40390E 00  341  343.34380E-02  341  344.71940E-02  341  345.53770E-01  683
341  346.93100E-02  341  352.86510E-02  341  355.17430E-01  341  356.14510E 00  684
341  357.18580E-01  341  389.73550E-03  341  391.66810E-02  341  392.90750E-02  685
341 2003.81200E-01  341 2004.11670E 00  341 2007.59300E-01  341 2008.44720E 00  686
342  343.13540E-01  342  344.11950E-01  342  345.66720E-02  342  355.43440E-01  687
342  356.16270E-01  342  389.35790E-03  342  390.10950E-01  342  391.38800E-02  688
342  392.16120E-01  342 2004.87800E-01  342 2008.30890E-03  342 2008.14420E 00  689
342 3354.35810E-04  342 3354.33490E-03  342 9003.12230E-03  342 9003.86000E-04  690
342 9003.97500E-03  343  344.11400E-01  343  353.12520E-01  343  354.27710E-01  691
343  355.36230E-01  343  390.58100E-02  343  391.27290E-02  343  392.27540E-02  692
343 7354.99740E-01  344  352.40610E-02  344  353.96380E-02  344  355.43560E-01  693
344  356.45070E-02  344  391.47670E-02  344 7005.94060E-03  344 7010.27280E-01  694
344 7354.65260E-02  344 7354.15380E-02  345  351.45960E-02  345  352.31420E-01  695
345  353.40090E-02  345  356.11420E 00  345  391.27050E-02  345  392.22940E-02  696
345 7004.20810E-02  345 7011.66850E-01  346  350.51840E-02  346  351.51770E-01  697
346  352.46220E-02  346  357.15910E 00  346 7012.88820E-01  347  349.46550E-02  698
347  350.49480E-01  347  351.52440E-02  347  358.14500E 00  347  359.67200E-02  699
347  360.14100E-02  347  372.38680E-02  347  374.30040E-02  347  381.23710E-02  700
347  382.52160E-02  347  385.49700E-02  347  386.24360E-02  347  388.94580E-02  701
347 1021.55970E-03  347 7013.78860E-01  347 7015.74820E-03  347 7016.96420E-03  702
347 7359.14410E-02  348  349.43870E-02  348  350.45820E-02  348  358.58520E-02  703
348  359.23700E-01  348  360.30880E-02  348  374.10140E-01  348  381.28080E-02  704
348  382.26950E-02  348  386.43300E-03  348 1021.43350E-03  348 7013.14900E-02  705
348 7015.88230E-02  348 7016.10390E-02  348 7359.13970E-01  349  358.58820E-02  706
349  359.23780E-01  349  360.30970E-02  349  372.78910E-02  349  374.24970E-02  707
349  382.58680E-02  349  386.43640E-03  349 1021.41500E-03  349 2005.10220E-03  708
349 2005.24400E-01  349 9001.34670E-03  349 9001.64130E-04  350  358.14330E 00  709
350  359.66790E-02  350  360.13990E-02  350  374.52330E-02  350  381.27490E-02  710
350  382.42190E-02  350  383.42390E-03  350  385.31130E-02  350  386.24540E-02  711
350  388.93400E-02  350 1021.56270E-03  350 2005.25730E-03  350 2005.86700E-01  712
350 2006.76100E-01  350 2006.22600E-03  351  357.15910E 00  351 2006.11940E-03  713
351 2006.36100E-01  351 2007.13920E 00  351 2007.65560E-03  352  353.33150E-03  714
352  356.11490E 00  352  392.27290E-02  352 2007.25900E-01  352 2008.12590E 00  715
352 2008.56900E-03  352 9003.51030E-03  352 9003.18530E-03  353  355.43110E-01  716
353  356.35630E-02  353  392.51940E-02  353 2008.57000E-01  353 2008.31580E-03  717
353 3354.40720E-04  353 9003.54370E-04  353 9003.11850E-03  353 9003.56090E-03  718
354 7354.11380E 01  355  390.86690E-02  355  391.15330E-01  355  392.15450E-01  719
355  399.49550E-03  355 2309.56120E-03  355 3355.12470E-02  356  389.55850E-03  720
356  391.99830E-02  356  392.10010E-01  356  399.18310E-02  356 3356.58160E-01  721
357  371.13290E-02  357  385.24820E-02  357  388.38630E-02  357  394.25290E-03  722
357 2010.11190E 01  358  360.10250E-02  358  371.42320E-02  358  372.10240E-01  723
358  373.60840E-02  358  374.13810E-01  358  381.88470E-02  358  382.16470E-01  724
358  383.60640E-03  358  384.46230E-02  358  385.13430E-01  358  386.98150E-02  725
358  388.10130E 00  358  394.64000E-03  358 1021.18990E-02  358 2009.96020E 00  726
359  360.72130E-02  359  372.10750E-01  359  374.15030E-01  359  381.63900E-02  727
```

1		2		3		4		5		6		7		8	
359	382.11810E-01	359	386.96470E-03	359	1021.13760E-02	359	7359.22480E 00							728	
360	365.82150E-04	360	374.10250E-02	360	382.81160E-03	360	3359.19510E-03							729	
361	362.45690E-02	361	363.90220E-02	361	364.45690E-02	361	365.90220E-02							730	
361	375.90220E-02	361	376.90220E-02	361	377.23740E 00	361	397.81480E-02							731	
361	5381.22840E-03	361	5382.22840E-03	361	9001.22140E-02	362	363.27420E-01							732	
362	364.91550E-02	362	365.27420E-01	362	373.73170E-03	362	375.30530E-01							733	
362	376.30530E-01	362	377.53330E 00	362	396.98140E-03	362	396.48810E-02							734	
362	1020.24840E-01	362	1021.82660E-02	362	5381.10530E-01	362	5382.10530E-01							735	
362	6015.15650E-02	362	6016.37890E-02	362	6017.22200E-02	363	364.27420E-01							736	
363	375.20840E 00	363	397.50740E-03	363	397.66800E-02	363	5381.44890E-02							737	
363	5382.44890E-02	363	9001.38420E-02	363	9005.94750E-03	364	365.27420E-01							738	
364	371.54430E-03	364	375.30530E-01	364	376.30530E-01	364	377.53330E 00							739	
364	395.45330E-02	364	395.86190E-03	364	1020.24840E-01	364	1021.82660E-02							740	
364	5381.10530E-01	364	5382.10530E-01	364	9001.42010E-01	365	370.38670E-02							741	
365	376.20840E 00	365	3359.48400E-02	365	5381.44890E-02	365	5382.44890E-02							742	
370	393.83050E-03	370	3359.76630E-03	370	9001.42010E-03	371	395.11790E-03							743	
371	9001.13360E-02	373	9005.19300E-03	374	386.51420E-03	375	376.27240E-03							744	
375	377.24830E 00	375	1020.10360E-01	375	1021.34670E-02	375	5381.68440E-02							745	
375	5382.68440E-02	376	377.24830E 00	376	1020.10360E-01	376	1021.34670E-02							746	
376	5381.68440E-02	376	5382.68440E-02	377	1020.23740E 00	381	5381.77700E-01							747	
382	386.43330E-03	382	5382.14200E 00	385	387.13190E-03	389	391.16870E-03							748	
389	392.17180E-03	391	392.15250E-01	393	3359.38040E-02	393	9001.15700E-02							749	
395	397.15750E-02	395	9001.15550E-02	395	9001.16230E-01	395	9005.15790E-02							750	
396	397.15750E-02	396	9005.18610E-02	397	400.10060E-02	397	9001.43310E-01							751	
397	9005.50600E-01	398	9001.41600E-02	399	2309.81430E-03	399	3355.31480E-02							752	
399	3356.76590E-02	399	6011.50140E-02	399	9003.58640E-02	400	3400.11860E-01							753	
400	9001.47340E-02	400	9005.10220E-01	1020	1021.55560E-01	1020	5381.55560E-01							754	
1020	5382.55560E-01	1025	9001.18750E-01	1025	9005.10800E-01	2001	2301.21000E-02							755	
2001	9001.81930E-03	2001	9001.57760E-01	2001	9001.34100E-03	2001	9001.38220E-03							756	
2001	9002.32210E-02	2001	9002.15120E-03	2002	9001.31560E-04	2002	9001.24640E-03							757	
2002	9001.12180E-01	2002	9002.10920E-03	2002	9002.29560E-01	2002	9002.27570E-03							758	
2002	9004.47980E-04	2003	2303.21000E-02	2003	2304.70000E-03	2003	9001.26890E-04							759	
2003	9002.63520E-01	2003	9002.62170E-03	2003	9002.11920E-04	2003	9002.37290E-03							760	
2003	9003.46660E-04	2003	9004.10810E-03	2004	2305.21000E-02	2004	2306.40000E-03							761	
2004	3354.87390E-04	2004	3354.11290E-04	2004	9002.80700E-04	2004	9002.84300E-03							762	
2004	9002.38450E-01	2004	9003.32870E-04	2004	9003.10540E-03	2004	9003.31320E-01							763	
2004	9003.29860E-03	2004	9003.38050E-03	2005	2302.21000E-02	2005	9001.56690E-04							764	
2005	9001.21880E-01	2005	9001.19920E-03	2005	9002.34120E-02	2006	9001.80500E-02							765	
2006	9002.12270E-01	2007	2304.14000E-02	2007	9002.20880E-01	2008	2306.17000E-02							766	
2008	3354.10070E-03	2008	9002.22790E-01	2008	9003.29330E-03	2008	9003.19660E-01							767	
2008	9003.91420E-04	2008	9003.17960E-03	2009	2307.21000E-02	2009	3359.64310E-02							768	
2010	2308.21000E-02	2301	9001.18720E-01	2302	9001.88060E-02	2303	9002.15210E-01							769	
2304	9002.85340E-02	2305	9002.11240E-02	2305	9003.15150E-01	2306	9002.10950E-02							770	
2306	9003.12470E-01	2309	3354.22840E-02	2309	3355.16380E-02	2309	6010.86650E-03							771	
2309	9003.12350E-02	3310	9002.62130E-01	3311	9002.31450E-01	3312	5313.32440E-01							772	
3312	9001.36880E-01	3312	9006.23210E 00	3313	5313.51250E-01	3313	9001.55510E-02							773	
3313	9006.39640E-01	3354	7354.51030E-01	3354	9003.12730E 00	3355	3356.15690E-02							774	
3355	9003.16630E-02	3359	6013.87320E-02	3359	7359.20910E-01	3400	5313.58890E-01							775	
3400	6018.38690E-02	3400	9001.74170E-01	3400	9005.25100E-01	5313	6001.10830E-01							776	
5313	6002.61160E-02	5313	7313.23660E-01	5313	9001.10280E 00	5313	9005.29460E-01							777	
5313	9006.77240E-01	6001	7313.10710E-02	6001	9006.10070E-01	6002	7002.79560E-02							778	
6002	9006.59390E-01	6003	7003.75970E-02	6004	7004.73660E-02	6004	9002.58460E-02							779	

```
1234567891 1234567892 1234567893 1234567894 1234567895 1234567896 1234567897 1234567890
 6005 7005.41250E-02 6010 7010.31240E-02 6011 7011.73010E-02 6012 7012.92710E-02          780
 6013 7013.79560E-02 6015 7015.10820E-02 6016 7016.24710E-02 6017 7017.24600E-02          781
 6017 9001.22390E-02 6017 9005.25090E-02 6018 7018.20550E-02 6018 9001.53180E-02          782
 6018 9005.39730E-02 7002 7012.27850E-02 7002 7013.62800E-02 7002 7015.37880E-03          783
 7002 7016.14130E-02 7002 7017.19600E-02 7002 7018.11510E-02 7002 7359.94130E-03          784
 7003 7011.21110E-02 7003 7012.84820E-02 7003 7013.22730E-02 7004 7010.18410E-02          785
 7004 7011.89800E-02 7004 7012.29090E-02 7004 7354.34050E-03 7004 7354.51480E-03          786
 7004 7354.70150E-03 7005 7010.34650E-02 7005 7011.26460E-02 7005 7354.51620E-02          787
 7005 7354.15990E-02 7005 7354.47260E-02 7005 7354.44640E-03 7010 7354.23950E-02          788
 7010 7354.15660E-03 7010 7354.48140E-02 7010 7354.80340E-03 7011 7354.16910E-03          789
 7011 7354.14390E-03 7011 7354.59970E-03 7011 7354.59180E-03 7013 7015.76380E-03          790
 7013 7016.21040E-02 7013 7017.12480E-02 7013 7313.13680E-02 7015 7359.65130E-02          791
 7016 7359.13840E-02 7017 7313.14860E-02 7018 7313.93540E-02 9001 9005.17660E 00          792
 9001 9006.87470E-01 9002 9003.35300E 00 9002 9004.36660E 00                              793
9999999999                                                                                794
   17   18.14600E 01   17   21.39180E 01   17   25.39500E 01   17  613.60800E-01          795
   18   19.14600E 01   18   22.39180E 01   18   26.39500E 01   19   20.14600E 01          796
   19   23.39180E 01   19   27.39500E 01   20   24.39180E 01   20   28.39500E 01          797
   20  654.33800E-01   21   22.14800E 01   21  659.13680E 00   22   23.14800E 01          798
   22  125.28250E 00   23   24.14800E 01   23  125.28250E 00   25   26.14600E 01          799
   25   29.39180E 01   25 9005.24600E 01   25 9006.40000E 00   26   27.14800E 01          800
   26   30.39180E 01   27   28.14600E 01   27   31.39180E 01   28   32.39180E 01          801
   29   30.14800E 01   29 9001.18000E 00   30   31.14600E 01   30  127.28250E 00          802
   30 9004.20000E 00   31   32.14800E 01   31  127.28250E 00   31 9002.12000E 00          803
   31 9004.20000E 00  125  145.21900E 01  126  153.21900E 01  127  146.52700E 00          804
  132  154.52700E 00  145  146.15200E 01  153  154.15200E 01  302  303.32430E 01          805
  302  313.17410E 01  302  314.32430E 01  302  400.28800E-01  303  304.89690E 00          806
  303  313.13230E 01  303  373.11870E 01  303  381.21000E 00  303  394.77920E 00          807
  304  305.54170E 00  304  313.10180E 01  304  326.30680E 01  305  306.17390E 00          808
  305  312.25590E 01  305  325.30080E 01  306  307.63000E-01  306  311.30530E 01          809
  306  324.39260E 01  307  308.48800E-01  307  310.35500E 01  307  323.51210E 01          810
  308  309.19150E 01  308  320.90700E 00  308  322.34380E 01  309  310.37760E 00          811
  309  319.20550E 01  309  320.10200E 01  309  389.28300E-02  309  390.28300E-02          812
  310  311.29130E 00  310  318.35900E 01  311  312.30250E 00  311  317.30530E 01          813
  312  313.46250E 00  312  316.22880E 01  313  314.13230E 01  313  315.10180E 01          814
  313  613.60800E-01  314  315.89690E 00  314  371.10530E 01  314  382.21100E 00          815
  314  394.77920E 00  315  316.54170E 00  315  327.17530E 01  315 2001.30700E-02          816
  316  317.33290E 00  316  328.40000E 01  316 2001.46000E-02  316 2002.46000E-02          817
  317  318.21880E 00  317  329.52350E 01  317 2002.30700E-02  317 2003.92000E-02          818
  318  319.11960E 00  318  330.69080E 01  318 2003.15300E-02  318 2004.46100E-02          819
  319  320.90700E 00  319  331.45350E 01  319 2004.30700E-02  320  321.78590E 01          820
  320  354.46700E 00  321  322.47550E 00  321  331.47550E 00  321  332.60540E 01          821
  321  354.41670E 01  322  323.23930E 00  322  333.16890E 01  323  324.21290E 00          822
  323  334.30080E 01  324  325.28670E 00  324  335.31290E 01  325  326.47000E 00          823
  325  336.28060E 01  326  337.17530E 01  326  373.13480E 01  327  328.62460E 00          824
  327  338.39250E 01  327  371.13480E 01  327 2001.42970E-01  328  329.37440E 00          825
  328  339.37310E 01  328 2001.53700E-02  328 2002.53700E-02  328 2005.23000E-02          826
  328 2006.23000E-02  329  330.45700E 00  329  340.41790E 01  329 2002.61400E-02          827
  329 2003.10750E-01  330  331.38400E 00  330  341.40570E 01  330 2003.46100E-02          828
  330 2004.76800E-02  331  342.22740E 01  331 2004.30700E-02  332  333.44030E 00          829
  332  342.48460E 00  332  343.78590E 01  332  354.36110E 01  332  389.28300E-02          830
  332  390.28300E-02  333  334.36540E 00  333  344.19290E 01  334  335.28440E 00          831
```

```
        1           2           3           4           5           6           7           8
123456789012345678901234567890123456789012345678901234567890123456789012345678901234567890
  334  345.44200E 01  335  336.21530E 00  335  346.47790E 01  336  337.36740E 00
  336  347.40660E 01  336  383.56800E-02  336  384.56800E-02  336  385.29910E 00
  337  348.50670E 01  337  374.16600E 01  338  339.51030E 00  338  349.80080E 01
  338  372.16600E 01  338 2005.30700E-02  339  340.29900E 00  339  350.54060E 01
  339 2005.30700E-02  339 2006.30700E-02  340  341.37350E 00  340  351.63960E 01
  340 2003.46100E-02  340 2006.30700E-02  340 2007.61400E-02  341  342.48380E 00
  341  352.58910E 01  341 2003.15400E-02  341 2004.15400E-02  341 2007.15400E-02
  341 2008.12280E-01  342  353.25900E 01  342 2004.84400E-01  343  344.23670E 00
  343  353.25510E 00  343  354.78400E 00  343  355.12130E 01  344  345.10960E 00
  344  355.65490E 01  345  346.72900E-01  345  356.35020E 01  346  347.70400E-01
  346  357.37740E 01  347  348.73910E 00  347  358.31950E 01  348  359.96860E 00
  348  360.19750E 01  349  350.32980E 00  349  359.88790E 00  349  360.10450E 01
  349 2005.30700E-02  350  351.17970E 00  350  358.30650E 01  350 2005.46000E-02
  350 2006.46000E-02  351  352.17510E 00  351  357.35140E 01  351 2006.30700E-02
  351 2007.92600E-02  352  353.26290E 00  352  356.31680E 01  352 2007.30700E-02
  352 2008.92100E-02  353  355.14570E 01  353 2008.30700E-02  354  654.33800E-01
  355  356.41270E 00  355  389.28300E-02  355  390.28300E-02  355  391.11390E 00
  355  392.11390E 00  355  399.18100E 00  355 2309.36300E 00  356  357.25500E 00
  356  399.36300E 00  357  358.27860E 00  357 2010.49110E-01  358  359.50620E 00
  358  387.28780E-01  358  388.28800E-01  358 2009.49110E-01  359  360.22410E 01
  359  386.24000E 00  359  659.13680E 00  360  372.69880E 00  360  374.69800E 00
  360  381.26900E 00  360  382.46100E 00  361  362.10850E 01  361  363.23470E 00
  361  364.10850E 01  361  365.23470E 00  361  375.29400E 00  361  376.29400E 00
  362  363.53000E 00  362  365.53000E 00  362  375.82850E 00  362  376.82850E 00
  362  396.44200E-01  362  396.44200E-01  362  397.48300E 00  362 1020.47780E 00
  362 5381.12030E 01  363  364.53000E 00  363  375.81570E 00  363 5381.10530E 00
  363 5382.11680E 00  364  365.53000E 00  364  375.82850E 00  364  376.82850E 00
  364  395.44200E-01  364  395.44200E-01  364  397.48300E 00  364 1020.51860E 00
  364 5382.11160E 01  365  370.99220E-01  365  376.81570E 00  365 5381.10530E 00
  365 5382.11680E 00  370  393.59720E-01  371  372.96060E 00  371  382.81300E 00
  371  397.12300E 00  372  382.74600E 00  372  395.89280E-02  373  374.11290E 01
  373  381.46100E 00  373  397.12300E 00  374  381.41900E 00  374  396.89280E-02
  375  378.48000E 00  375 1020.12690E 00  375 5381.96000E-01  375 5382.19800E 00
  376  379.48000E 00  376 1020.12690E 00  376 5381.96000E-01  376 5382.19800E 00
  380 5382.48000E 00  381 5381.27400E 00  382 5382.35200E 00  383  384.22680E 01
  387  388.25200E 01  389  390.65000E 01  395  396.26100E 00  395  398.12000E 00
  396  398.12000E 00 1020 5381.10720E 01 1020 5382.99480E 00 2001 2002.95800E-01
 2001 2005.22920E 00 2002 2006.22080E 00 2003 2007.40660E 00 2004 2008.53970E 00
 2005 2006.95800E-01 5381 5382.21970E 00
9999999999
   61
  0.0       0.025     0.050     0.075     0.100     0.125     0.150     0.175
  0.200     0.225     0.250     0.275     0.300     0.325     0.350     0.375
  0.400     0.425     0.450     0.475     0.500     0.525     0.550     0.575
  0.600     0.625     0.650     0.675     0.700     0.725     0.750     0.775
  0.800     0.825     0.850     0.875     0.900     0.925     0.950     0.975
  1.000     1.025     1.050     1.075     1.100     1.125     1.150     1.175
  1.200     1.225     1.250     1.275     1.300     1.325     1.350     1.375
  1.400     1.425     1.450     1.475     1.500
9999999999
  302   1.0
```

```
1234567890123456789012345678901234567890123456789012345678901234567890123456789012345678901234567890
```

303 1.0

314 1.0

383 1.0

387 1.0

389 1.0

```
         1         2         3         4         5         6         7         8
123456789012345678901234567890123456789012345678901234567890123456789012345678901234567890

 394   1.0                                                                          936
                                                                                    937
                                                                                    938
                                                                                    939
                                                                                    940
                                                                                    941
                                                                                    942
                                                                                    943
                                                                                    944
 400   1.0                                                                          945
                                                                                    946
                                                                                    947
                                                                                    948
                                                                                    949
                                                                                    950
                                                                                    951
                                                                                    952
                                                                                    953
 399   1.0                                                                          954
 10.094    10.094    10.094    10.094    10.094    10.094    10.094    10.094        955
 10.094    10.094    10.094    10.094    10.094    10.094    10.094    10.094        956
 10.094    10.094    10.094    10.094    10.094    10.094    10.094    10.094        957
 10.094    10.094    10.094    10.094    10.094    10.094    10.094    10.094        958
 10.094    10.094    10.094    10.094    10.094    10.094    10.094    10.094        959
 10.094    10.094    10.094    10.094    10.094    10.094    10.094    10.094        960
 10.094    10.094    10.094    10.094    10.094    10.094    10.094    10.094        961
 10.094    10.094    10.094    10.094    10.094                                    962
2301   1.0                                                                          963
  0.40068   0.40068   0.40068   0.40068   0.40068   0.40068   0.40068   0.40068      964
  0.40068   0.40068   0.40068   0.40068   0.40068   0.40068   0.40068   0.40068      965
  0.40068   0.40068   0.40068   0.40068   0.40068   0.40068   0.40068   0.40068      966
  0.40068   0.40068   0.40068   0.40068   0.40068   0.40068   0.40068   0.40068      967
  0.40068   0.40068   0.40068   0.40068   0.40068   0.40068   0.40068   0.40068      968
  0.40068   0.40068   0.40068   0.40068   0.40068   0.40068   0.40068   0.40068      969
  0.40068   0.40068   0.40068   0.40068   0.40068   0.40068   0.40068   0.40068      970
  0.40068   0.40068   0.40068   0.40068   0.40068                                    971
2302   1.0                                                                          972
  0.40068   0.40068   0.40068   0.40068   0.40068   0.40068   0.40068   0.40068      973
  0.40068   0.40068   0.40068   0.40068   0.40068   0.40068   0.40068   0.40068      974
  0.40068   0.40068   0.40068   0.40068   0.40068   0.40068   0.40068   0.40068      975
  0.40068   0.40068   0.40068   0.40068   0.40068   0.40068   0.40068   0.40068      976
  0.40068   0.40068   0.40068   0.40068   0.40068   0.40068   0.40068   0.40068      977
  0.40068   0.40068   0.40068   0.40068   0.40068   0.40068   0.40068   0.40068      978
  0.40068   0.40068   0.40068   0.40068   0.40068   0.40068   0.40068   0.40068      979
  0.40068   0.40068   0.40068   0.40068   0.40068                                    980
2303   1.0                                                                          981
  0.32798   0.32798   0.32798   0.32798   0.32798   0.32798   0.32798   0.32798      982
  0.32798   0.32798   0.32798   0.32798   0.32798   0.32798   0.32798   0.32798      983
  0.32798   0.32798   0.32798   0.32798   0.32798   0.32798   0.32798   0.32798      984
  0.32798   0.32798   0.32798   0.32798   0.32798   0.32798   0.32798   0.32798      985
  0.32798   0.32798   0.32798   0.32798   0.32798   0.32798   0.32798   0.32798      986
  0.32798   0.32798   0.32798   0.32798   0.32798   0.32798   0.32798   0.32798      987
```

```
        1         2         3         4         5         6         7         8
123456789012345678901234567890123456789012345678901234567890123456789012345678
    0.32798   0.32798   0.32798   0.32798   0.32798   0.32798   0.32798   0.32798   988
    0.32798   0.32798   0.32798   0.32798   0.32798                               989
2304    1.0                                                                       990
    0.27099   0.27099   0.27099   0.27099   0.27099   0.27099   0.27099   0.27099   991
    0.27099   0.27099   0.27099   0.27099   0.27099   0.27099   0.27099   0.27099   992
    0.27099   0.27099   0.27099   0.27099   0.27099   0.27099   0.27099   0.27099   993
    0.27099   0.27099   0.27099   0.27099   0.27099   0.27099   0.27099   0.27099   994
    0.27099   0.27099   0.27099   0.27099   0.27099   0.27099   0.27099   0.27099   995
    0.27099   0.27099   0.27099   0.27099   0.27099   0.27099   0.27099   0.27099   996
    0.27099   0.27099   0.27099   0.27099   0.27099   0.27099   0.27099   0.27099   997
    0.27099   0.27099   0.27099   0.27099   0.27099                               998
2305    1.0                                                                       999
    0.28020   0.28020   0.28020   0.28020   0.28020   0.28020   0.28020   0.28020  1000
    0.28020   0.28020   0.28020   0.28020   0.28020   0.28020   0.28020   0.28020  1001
    0.28020   0.28020   0.28020   0.28020   0.28020   0.28020   0.28020   0.28020  1002
    0.28020   0.28020   0.28020   0.28020   0.28020   0.28020   0.28020   0.28020  1003
    0.28020   0.28020   0.28020   0.28020   0.28020   0.28020   0.28020   0.28020  1004
    0.28020   0.28020   0.28020   0.28020   0.28020   0.28020   0.28020   0.28020  1005
    0.28020   0.28020   0.28020   0.28020   0.28020   0.28020   0.28020   0.28020  1006
    0.28020   0.28020   0.28020   0.28020   0.28020                               1007
2306    1.0                                                                       1008
    0.27099   0.27099   0.27099   0.27099   0.27099   0.27099   0.27099   0.27099  1009
    0.27099   0.27099   0.27099   0.27099   0.27099   0.27099   0.27099   0.27099  1010
    0.27099   0.27099   0.27099   0.27099   0.27099   0.27099   0.27099   0.27099  1011
    0.27099   0.27099   0.27099   0.27099   0.27099   0.27099   0.27099   0.27099  1012
    0.27099   0.27099   0.27099   0.27099   0.27099   0.27099   0.27099   0.27099  1013
    0.27099   0.27099   0.27099   0.27099   0.27099   0.27099   0.27099   0.27099  1014
    0.27099   0.27099   0.27099   0.27099   0.27099   0.27099   0.27099   0.27099  1015
    0.27099   0.27099   0.27099   0.27099   0.27099                               1016
2307    1.0                                                                       1017
    0.29658   0.29658   0.29658   0.29658   0.29658   0.29658   0.29658   0.29658  1018
    0.29658   0.29658   0.29658   0.29658   0.29658   0.29658   0.29658   0.29658  1019
    0.29658   0.29658   0.29658   0.29658   0.29658   0.29658   0.29658   0.29658  1020
    0.29658   0.29658   0.29658   0.29658   0.29658   0.29658   0.29658   0.29658  1021
    0.29658   0.29658   0.29658   0.29658   0.29658   0.29658   0.29658   0.29658  1022
    0.29658   0.29658   0.29658   0.29658   0.29658   0.29658   0.29658   0.29658  1023
    0.29658   0.29658   0.29658   0.29658   0.29658   0.29658   0.29658   0.29658  1024
    0.29658   0.29658   0.29658   0.29658   0.29658                               1025
2308    1.0                                                                       1026
    0.30751   0.30751   0.30751   0.30751   0.30751   0.30751   0.30751   0.30751  1027
    0.30751   0.30751   0.30751   0.30751   0.30751   0.30751   0.30751   0.30751  1028
    0.30751   0.30751   0.30751   0.30751   0.30751   0.30751   0.30751   0.30751  1029
    0.30751   0.30751   0.30751   0.30751   0.30751   0.30751   0.30751   0.30751  1030
    0.30751   0.30751   0.30751   0.30751   0.30751   0.30751   0.30751   0.30751  1031
    0.30751   0.30751   0.30751   0.30751   0.30751   0.30751   0.30751   0.30751  1032
    0.30751   0.30751   0.30751   0.30751   0.30751   0.30751   0.30751   0.30751  1033
    0.30751   0.30751   0.30751   0.30751   0.30751                               1034
2309    1.0                                                                       1035
    2.04600   2.04600   2.04600   2.04600   2.04600   2.04600   2.04600   2.04600  1036
    2.04600   2.04600   2.04600   2.04600   2.04600   2.04600   2.04600   2.04600  1037
    2.04600   2.04600   2.04600   2.04600   2.04600   2.04600   2.04600   2.04600  1038
    2.04600   2.04600   2.04600   2.04600   2.04600   2.04600   2.04600   2.04600  1039
```

```
         1         2         3         4         5         6         7         8
123456789012345678901234567890123456789012345678901234567890123456789012345678901234567890

   2.04600   2.04600   2.04600   2.04600   2.04600   2.04600   2.04600   2.04600
   2.04600   2.04600   2.04600   2.04600   2.04600   2.04600   2.04600   2.04600
   2.04600   2.04600   2.04600   2.04600   2.04600   2.04600   2.04600   2.04600
   2.04600   2.04600   2.04600   2.04600   2.04600
9999999999
  125
  49.62
  126
  51.30
  127
  49.61
  128
  49.61
  129
  49.61
  131
  49.61
  132
  49.61
  130
  50.00
  145
  52.80
  146
  52.8
  153
  44.95
  154
  44.95
 9005
  70.00
   20
  62.60
   24
  62.6
   28
  62.60
   32
  62.60
   18
  59.9
   19
  59.9
   22
  59.9
   23
  59.9
   26
  59.9
   27
  59.9
   30
```

```
         1         2         3         4         5         6         7         8
123456789012345678901234567890123456789012345678901234567890123456789012345678901234567890

  59.9                                                                                  1092
   31                                                                                   1093
  59.9                                                                                  1094
   17                                                                                   1095
  60.30                                                                                 1096
   21                                                                                   1097
  60.30                                                                                 1098
   25                                                                                   1099
  60.30                                                                                 1100
   29                                                                                   1101
  60.30                                                                                 1102
9999999999                                                                              1103
   17    72.660   18    63.630   19    63.630   20    64.950   21    72.660            1104
   22    63.630   23    63.630   24    64.950   25    72.660   26    63.630            1105
   27    63.630   28    64.950   29    72.660   30    63.630   31    63.630            1106
   32    64.950   65    53.273   66    53.412   67    61.119   68    69.898            1107
   69    69.768   70    55.542   71    66.364   72    65.400   73    64.413            1108
   74    66.539   75    65.473   76    56.614   77    66.271   78    63.116            1109
   79    62.871   80    58.171   81    58.817  125    50.810  126    52.440            1110
  127    50.640  128    52.050  129    52.050  130    52.050  131    52.050            1111
  132    52.050  139    55.130  145    66.640  146    66.640  153    55.450            1112
  154    55.450  301    67.142  302    69.829  303    69.720  304    70.192            1113
  305    70.211  306    69.929  307    69.567  308    70.054  309    69.960            1114
  310    69.453  311    70.077  312    70.192  313    70.257  314    69.693            1115
  315    70.150  316    70.457  317    69.957  318    69.460  319    69.750            1116
  320    70.070  321    70.114  322    70.104  323    69.631  324    69.823            1117
  325    70.070  326    69.819  327    69.501  328    70.561  329    69.994            1118
  330    69.532  331    69.737  332    70.156  333    70.216  334    69.682            1119
  335    69.845  336    70.023  337    69.363  338    69.138  339    70.095            1120
  340    69.674  341    69.478  342    69.701  343    70.196  344    70.451            1121
  345    69.665  346    69.887  347    69.818  348    69.268  349    69.036            1122
  350    69.502  351    69.221  352    69.176  353    69.655  354    70.075            1123
  355    70.564  356    69.624  357    69.978  358    69.701  359    69.039            1124
  360    68.926  361    60.880  362    60.875  363    61.224  364    60.797            1125
  365    60.767  370    58.299  371    68.722  372    68.731  373    69.005            1126
  374    68.987  375    61.074  376    60.950  377    60.940  378    61.074            1127
  379    60.949  380    62.082  381    67.718  382    67.744  383    80.260            1128
  384    79.502  385    70.076  386    69.102  387    69.725  388    69.725            1129
  389    86.589  390    86.089  391    70.298  392    70.236  393    55.447            1130
  394    69.692  395    54.628  396    55.900  397    58.404  398    54.366            1131
  399    79.690  400    72.219  613    71.292  654    67.633  659    70.816            1132
 1020    61.549 1021    63.059 1025    60.727 2001    72.909 2002    72.811            1133
 2003    70.932 2004    70.668 2005    72.562 2006    72.476 2007    70.560            1134
 2008    70.892 2009    72.325 2010    70.668 2301    74.567 2302    69.259            1135
 2303    71.835 2304    66.090 2305    71.273 2306    68.471 2307    61.715            1136
 2308    62.164 2309    74.311 3309    64.123 3310    65.533 3311    65.324            1137
 3312    66.518 3313    67.000 3354    56.810 3355    55.726 3356    54.678            1138
 3359    52.883 3400    65.693 5313    66.632 5381    61.912 5382    62.084            1139
 6001    67.152 6002    66.921 6003    65.479 6004    65.567 6005    64.833            1140
 6010    53.986 6011    54.017 6012    53.070 6013    52.340 6015    57.935            1141
 6016    58.752 6017    60.282 6018    63.055 7002    69.902 7003    69.688            1142
 7004    69.555 7005    69.729 7010    69.547 7011    69.282 7012    69.347            1143
```

```
        1         2         3         4         5         6         7         8
12345678901234567890123456789012345678901234567890123456789012345678901234567890
 7013   69.399 7015    69.124 7016    69.387 7017    69.611 7018    69.802          1144
 7313   69.902 7354    69.718 7359    68.382 9000    69.200 9001    69.260          1145
 9002   69.300 9003    69.200 9004    69.200 9005    64.770 9006    69.200          1146
9999999999                                                                         1147
888888                                                                             1148
   NRL A THERMAL DISTORTION DAY 333 21 15  SHORT WAVE LENGTH OPER 12-6-73 RRA      1149
   NRL A THERMAL DISTORTION DAY 333 21 15  SHORT WAVE LENGTH OPER 12-6-73 RRA      1150
                                                                                   1151
99999999                                                                           1152
   61                                                                              1153
   0.0     0.025   0.050   0.075   0.100   0.125   0.150   0.175                   1154
   0.200   0.225   0.250   0.275   0.300   0.325   0.350   0.375                   1155
   0.400   0.425   0.450   0.475   0.500   0.525   0.550   0.575                   1156
   0.600   0.625   0.650   0.675   0.700   0.725   0.750   0.775                   1157
   0.800   0.825   0.850   0.875   0.900   0.925   0.950   0.975                   1158
   1.000   1.025   1.050   1.075   1.100   1.125   1.150   1.175                   1159
   1.200   1.225   1.250   1.275   1.300   1.325   1.350   1.375                   1160
   1.400   1.425   1.450   1.475   1.500                                           1161
   0                                                                               1162
1025  0.46667  1.4500  999.9   999.9   999.9   999.9                              1163
1025  0.46667  1.4500  999.9   999.9   999.9   999.9                              1164
1025  999.9    999.9   999.9   999.9   999.9   999.9                              1165
9999999999                                                                         1166
   6   1   1   0                                                                   1167
 302  0.288                                                                        1168
 303  0.749                                                                        1169
 314  1.023                                                                        1170
 389  6.026                                                                        1171
 394  0.288                                                                        1172
 400  2.678                                                                        1173
 383  3.043                                                                        1174
 387  3.043                                                                        1175
9999999999                                                                         1176
   2                                                                               1177
9999999999                                                                         1178
   2                                                                               1179
  17  66.967  18  63.230  19  63.230  20  66.275  21  66.967                      1180
  22  63.230  23  63.230  24  66.275  25  66.967  26  63.230                      1181
  27  63.230  28  66.275  29  66.967  30  63.230  31  63.230                      1182
  32  66.275  65  76.870  66  78.152  67  71.547  68  69.813                      1183
  69  69.313  70  66.271  71  69.574  72  70.397  73  70.395                      1184
  74  70.192  75  70.324  76  64.011  77  69.839  78  71.269                      1185
  79  71.638  80  66.135  81  73.404 125  78.551 126  80.789                      1186
 127  74.491 128  76.430 129  76.430 130  55.420 131  76.430                      1187
 132  76.430 139  71.776 145  65.479 146  65.479 153  47.432                      1188
 154  47.432 301  70.426 302  71.068 303  71.009 304  70.495                      1189
 305  69.661 306  69.293 307  68.525 308  70.368 309  70.349                      1190
 310  68.498 311  69.489 312  69.607 313  70.779 314  71.129                      1191
 315  70.851 316  70.119 317  69.525 318  68.798 319  70.299                      1192
 320  70.565 321  70.633 322  70.357 323  68.374 324  69.114                      1193
 325  69.484 326  70.438 327  70.880 328  70.058 329  69.398                      1194
 330  68.731 331  70.278 332  70.700 333  70.494 334  68.874                      1195
```

```
        1         2         3         4         5         6         7         8
12345678901234567890123456789012345678901234567890123456789012345678901234567890
  335   69.309  336   69.731  337   70.388  338   70.851  339   70.312          1196
  340   69.862  341   69.325  342   70.398  343   70.755  344   70.950          1197
  345   68.835  346   69.378  347   69.605  348   70.365  349   70.806          1198
  350   70.216  351   70.082  352   69.367  353   70.651  354   70.589          1199
  355   71.159  356   68.585  357   69.453  358   69.230  359   70.404          1200
  360   70.585  361   72.667  362   72.776  363   72.667  364   72.805          1201
  365   72.816  370   74.317  371   71.085  372   70.907  373   70.808          1202
  374   70.604  375   72.640  376   72.681  377   71.990  378   72.638          1203
  379   72.679  380   72.424  381   71.029  382   71.128  383   78.883          1204
  384   77.885  385   69.730  386   70.336  387   73.206  388   73.110          1205
  389   94.156  390   93.407  391   70.571  392   70.550  393   76.296          1206
  394   71.238  395   76.473  396   76.018  397   74.657  398   76.737          1207
  399   83.710  400   79.508  613   68.131  654   67.681  659   68.166          1208
 1020   72.508 1021   72.095 1025  -459.700 2001   73.004 2002   72.743          1209
 2003   70.756 2004   70.739 2005   72.583 2006   72.307 2007   70.957          1210
 2008   70.763 2009   71.981 2010   70.793 2301   83.308 2302   85.967          1211
 2303   82.048 2304   82.116 2305   76.604 2306   76.203 2307   86.723          1212
 2308   87.104 2309   75.435 3309   69.677 3310   70.347 3311   70.486          1213
 3312   70.073 3313   70.014 3354   63.853 3355   76.663 3356   78.901          1214
 3359   76.921 3400   70.380 5313   69.903 5381   72.463 5382   72.427          1215
 6001   69.762 6002   69.753 6003   70.386 6004   70.331 6005   69.891          1216
 6010   76.382 6011   79.179 6012   79.119 6013   77.642 6015   73.787          1217
 6016   73.234 6017   72.178 6018   70.477 7002   69.760 7003   69.347          1218
 7004   69.041 7005   69.802 7010   70.122 7011   69.411 7012   69.627          1219
 7013   69.971 7015   70.218 7016   70.108 7017   70.094 7018   70.115          1220
 7313   70.410 7354   70.199 7359   70.628 9000   69.171 9001   69.223          1221
 9002   69.171 9003   69.171 9004   69.171 9005   67.877 9006   69.171          1222
9999999999                                                                     1223
PMD.E                                                                          1224
FIN                                                                            1225
```

S082B
THERMAL DISTORTION ANALYSIS
COMPLETE INPUT DATA LISTING
DOY 381:22:21

```
RUN,//T NRLBTD,1BNTSV140006,BBRCNBBIN232,20,500
MSG,IW BACKUP TAPES TO 38216 ARE 38047,04596
ASG,T PAR.,T,38216
REWIND PAR.
FREE TPF$.
ASG,T TPF$.,F2/1/POS/10
ERS TPF$.
COPIN PAR.,TPF$.
FREE PAR.
ASG,T 10.,F/1/POS/3
ASG,T 11.,F/1/POS/3
ASG,T 12.,F/1/POS/3
ASG,T 13.,F/1/POS/3
ASG,T 14.,T,50318/50415/51307
ASG,T 15.,F/1/POS/3
XQT ANRLB
 381   22   21    0    0    3    1    1    1
NRL B THERMAL ANALYTICAL MODEL UPDATED TO FLT CONFIGURATION 3-15 73 RRA
NRL B UPDATE RUN 1145 3-15-73 RRA
0.0       1.5       .0040      1.0       1.0       0.0333334
99999999999
  49
```

SO82B
NOMINAL DATA
DECK

ends with 88888
PG 32 OF LISTING

```
         1         2         3         4         5         6         7         8
123456789012345678901234567890123456789012345678901234567890123456789012345678901234567890

  50                                                                                1248
  51                                                                                1249
  52                                                                                1250
  53                                                                                1251
  54                                                                                1252
  55                                                                                1253
  56                                                                                1254
  57                                                                                1255
  58                                                                                1256
  59                                                                                1257
  60                                                                                1258
  61                                                                                1259
  62                                                                                1260
  63                                                                                1261
  64                                                                                1262
  70                                                                                1263
  72                                                                                1264
  73                                                                                1265
  75                                                                                1266
  76                                                                                1267
  77                                                                                1268
 121                                                                                1269
 122                                                                                1270
 123                                                                                1271
 124                                                                                1272
 138                                                                                1273
 143        1.60                                                                    1274
 144        1.38                                                                    1275
 151        1.6                                                                     1276
 152        1.38                                                                    1277
 193        3.753                                                                   1278
 194        3.753                                                                   1279
 195        3.753                                                                   1280
 196        3.753                                                                   1281
 197        3.702                                                                   1282
 198        3.702                                                                   1283
 199        3.702                                                                   1284
 200        3.702                                                                   1285
 201        3.702                                                                   1286
 202        3.702                                                                   1287
 203        3.702                                                                   1288
 204        3.702                                                                   1289
 205        3.753                                                                   1290
 206        3.753                                                                   1291
 207        3.753                                                                   1292
 208        3.753                                                                   1293
 361      0.3726                                                                    1294
 362      0.3847                                                                    1295
 363      0.1219                                                                    1296
 364      0.3255                                                                    1297
 365      0.1219                                                                    1298
 370      0.2031                                                                    1299
```

```
123456789 1 123456789 2 123456789 3 123456789 4 123456789 5 123456789 6 123456789 7 123456789 8 0
```

375	2.2300	1300
376	2.2300	1301
377	0 2.76	1302
378	0.0216	1303
379	0.0216	1304
380	0.0882	1305
381	0.1196	1306
382	0.2497	1307
393	0.1293	1308
1020	2.23	1309
1021		1310
401		1311
1401	0	1312
402	0.3727	1313
403	0.1372	1314
404	0.1209	1315
405	0.1153	1316
406	0.929	1317
407	1.050	1318
408	0.800	1319
409	0.908	1320
410	0.7183	1321
411	0.9470	1322
412	1.152	1323
413	.752	1324
414	0.705	1325
415	0.689	1326
416	0.6667	1327
417	0.4420	1328
418	0.2990	1329
423	0.2345	1330
424	0.1541	1331
425	0.4184	1332
426	0.4693	1333
427	0.4087	1334
428	0.3734	1335
429	0.7585	1336
430	0.1587	1337
431	0.295	1338
432	0.6225	1339
433	0.826	1340
434	0.6865	1341
435	0.2070	1342
436	0.1062	1343
437	0.3195	1344
438	0.3268	1345
439	0.2810	1346
440	0.3607	1347
441	0.4285	1348
442	0.362	1349
443	0.358	1350
444	0.3050	1351

```
        1         2         3         4         5         6         7         8
12345678901234567890123456789012345678901234567890123456789012345678901234567890
```

445	0.3779	1352
446	0.1024	1353
447	0.062	1354
448	0.1987	1355
449	0.2034	1356
450	0.1757	1357
451	0.1930	1358
452	1.256	1359
453	0.476	1360
454	0.588	1361
455	0.602	1362
456	0.6022	1363
457	0.597	1364
458	0.7595	1365
459	0.750	1366
460	0.450	1367
461	0.5750	1368
462	0.5050	1369
463	0.3202	1370
464	0.6685	1371
465	0.286	1372
466	0.042	1373
467	0	1374
468	0.0494	1375
469	0.0494	1376
470	0.1722	1377
471	0.730	1378
472	0.1312	1379
473	0.795	1380
474	1.410	1381
475	0.3705	1382
476	0.9375	1383
477	1.5770	1384
478	1.2951	1385
479	0.9465	1386
480	0.1993	1387
481	0.1930	1388
482	0.2000	1389
483	0.570	1390
484	0.2914	1391
485	0.583	1392
486	1.098	1393
487	1.014	1394
488		1395
489		1396
494		1397
1494	0	1398
495	0.9575	1399
503	0.0778	1400
504	0.1059	1401
505		1402
506		1403

507		1404
508		1405
510	0.6337	1406
511	0.4783	1407
512	0.6910	1408
513	0.2998	1409
514	0.1773	1410
515	0.2688	1411
516	0.2688	1412
616	0.2688	1413
517	0.2236	1414
518	0.2236	1415
519	0.1285	1416
520		1417
521		1418
522		1419
523	0.0513	1420
524	0.0622	1421
525		1422
526		1423
527	1.8699	1424
528	1.8699	1425
529	1.8699	1426
530	1.3306	1427
531	1.3306	1428
532	0.2550	1429
533	0.3918	1430
534	0.3250	1431
535	1.485	1432
536	0.1423	1433
537	0.1703	1434
538	1.0045	1435
539	1.1336	1436
540	2.881	1437
543	2.4970	1438
546	0.2657	1439
547	0.1207	1440
548	0.0768	1441
549	0.0716	1442
550	0.2725	1443
551	0.2725	1444
552	0.1739	1445
553	0.2247	1446
555	0.4838	1447
557	0.3298	1448
558	0.4345	1449
559	0.119	1450
562	0.2981	1451
563	0.7575	1452
566	0.0394	1453
570		1454
571	0.0534	1455

```
         1         2         3         4         5         6         7         8
123456789 0123456789 0123456789 0123456789 0123456789 0123456789 0123456789 0

 572                                                                          1456
 573      0.0818                                                              1457
 574      0.0308                                                              1458
 575      0.0508                                                              1459
 576      0.0404                                                              1460
 577      0.0610                                                              1461
 578      0.0529                                                              1462
 579      0.0411                                                              1463
 580                                                                          1464
 581                                                                          1465
1300     1                                                                    1466
1301     1                                                                    1467
1302     1                                                                    1468
1303     1                                                                    1469
1304     1                                                                    1470
1305     1                                                                    1471
1306     1                                                                    1472
1307     1                                                                    1473
1308                                                                          1474
1309                                                                          1475
1310                                                                          1476
1311                                                                          1477
1312                                                                          1478
1313     1                                                                    1479
1314     1                                                                    1480
1315     1                                                                    1481
1316     1                                                                    1482
1317     1                                                                    1483
1318     1                                                                    1484
1319     1                                                                    1485
1320     1                                                                    1486
1321     1                                                                    1487
1322                                                                          1488
1440          0.3515                                                          1489
1441          0.3515                                                          1490
1442          0.2278                                                          1491
1443          0.2278                                                          1492
1444          0.3515                                                          1493
1445          0.3515                                                          1494
1446          0.2278                                                          1495
1447          0.2278                                                          1496
1448          0.3362                                                          1497
1449          0.3362                                                          1498
1450          0.3515                                                          1499
1451          0.3515                                                          1500
1452          0.2278                                                          1501
1453          0.2278                                                          1502
1454          0.3515                                                          1503
1455          0.3515                                                          1504
1456          0.2278                                                          1505
1457          0.2278                                                          1506
1458          0.3362                                                          1507
```

```
        1         2         3         4         5         6         7         8
123456789 0123456789 0123456789 0123456789 0123456789 0123456789 0123456789 0
```

1459	0.3362	1508
2406	0.1315	1509
2407	0.0570	1510
3407	0.0865	1511
2408	0.1292	1512
2424	0.0310	1513
2425	0.1650	1514
2426	0.0694	1515
3426	0.1055	1516
2427	0.1576	1517
2428	0.1306	1518
2452	0.1732	1519
3453	0.0317	1520
2454	0.1335	1521
2455	0.0563	1522
3455	0.0855	1523
2456	0.1277	1524
2457	0.1322	1525
2473	0.13410	1526
2474	0.1884	1527
2476	0.0658	1528
2477	0.0201	1529
3477	0.0480	1530
2478	0.0379	1531
3478	0.0239	1532
2479	0.0620	1533
4402		1534
4409		1535
4413		1536
4429		1537
4435		1538
4465		1539
4471		1540
4474		1541
4495		1542
4510		1543
4511		1544
5407	0.04266	1545
5408	0.04266	1546
5438	0.04266	1547
5439	0.04266	1548
5440	0.04266	1549
5453	0.04266	1550
5455	0.04266	1551
5456	0.04266	1552
5457	0.04266	1553
5473	0.04266	1554
5474	0.04266	1555
5476	0.04266	1556
5477	0.04266	1557
5479	0.04266	1558
6402		1559

```
         1         2         3         4         5         6         7         8
123456789012345678901234567890123456789012345678901234567890123456789012345678901234567890

 6409
 6413
 6429
 6435
 6465
 6471
 6474
 8424
 8428
 8452
 8454
 8457
 9409
 9413
 9414
 9415
 9429
 9447
 9448
 9449
 9450
 9451
 9471
 9474
 9476
 9477
 9478
 9479
 9495
 9510
 9511
99999999999
 1401  0.0       0.91667
 1494  0.0       0.91667
99999999999
99999999999999
   49   58.18940E 00   49   59.30440E 00   49   60.40060E 00   49  122.13210E 00
   49  124.35970E 00   49  151.29660E 00   49  152.17030E 00   49  196.77400E-05
   49  199.18580E-04   49  200.60840E-03   49  534.13890E+00   49  535.59200E-01
   49  536.16160E-01   49 1442.23740E-01   49 1443.18790E-01   49 1448.89750E-02
   49 1452.30980E-01   49 1453.52110E-01   49 6409.40560E-01   49 6429.11660E 00
   49 9409.10910E 00   49 9429.14890E 00   49 9495.10660E 00   50   58.58550E-01
   50   59.43570E-01   50  122.32450E-01   50  124.30290E 00   50  151.40240E 00
   50  152.13520E 00   50  196.27240E-03   50  200.30960E-05   50 1450.77300E-02
   50 1452.70160E-02   50 1453.94160E-02   50 9495.24930E 00   51   70.13870E-01
   51   73.18410E-01   51  195.27860E-04   51  196.38240E-03   51  199.15480E-04
   51  200.12070E-03   51  431.32560E 00   51  432.94800E-02   51  442.43050E 00
   51  443.91930E-02   51  459.61570E 00   51  460.13270E-01   51  515.72910E-02
   51  516.21770E-02   51  616.26410E-02   51 4429.91950E-01   51 4474.80290E-01
   51 4495.62410E-01   52  121.60520E 00   52  138.25250E-01   52  143.25800E-01
   52  193.18580E-03   52  194.77400E-05   52  528.31090E-01   52 2474.10970E-01
   52 6474.22060E-01   52 9510.22490E-01   53   60.10460E-01   53   62.15530E 00
```

```
123456789 1 123456789 2 123456789 3 123456789 4 123456789 5 123456789 6 123456789 7 123456789 8 0
```

53	64.11630E-01	53	198.23220E-04	53	199.32510E-04	53	6413.77370E-01	1612
53	9413.71980E-02	53	9414.77010E-02	54	121.46350E 00	54	122.77690E 00	1613
54	138.47780E-01	54	194.17800E-03	54	195.19970E-03	54	196.11610E-03	1614
54	527.13950E 00	54	529.22090E-01	54	530.69600E-01	54	531.37800E-01	1615
54	532.21550E-01	54	537.72480E-02	54	538.41230E-01	54	6474.19230E 00	1616
54	9476.26250E-01	54	9478.72250E-01	55	56.96900E-01	55	61.21810E-01	1617
55	63.18230E 00	55	64.61680E 00	55	121.43570E-01	55	123.20500E 00	1618
55	138.33590E-01	55	143.17720E 00	55	144.12190E 00	55	197.42720E-03	1619
55	198.35600E-04	55	361.46260E-02	55	362.80170E-02	55	363.30010E-02	1620
55	364.16460E-01	55	365.12110E-01	55	370.13630E-01	55	393.91510E-02	1621
55	401.76610E-03	55	402.31250E-01	55	403.64590E-02	55	404.13300E-01	1622
55	405.18920E-02	55	423.79230E-03	55	473.17720E-03	55	480.18300E-03	1623
55	481.32260E-03	55	482.93000E-03	55	483.48470E-03	55	484.13400E-02	1624
55	511.99260E-02	55	512.12990E-01	55	540.30320E-01	55	562.23180E-01	1625
55	1307.96250E-02	55	1314.76620E-02	55	1401.16630E-01	55	1494.18380E-02	1626
55	2424.62780E-03	55	5473.10520E-03	55	6402.27330E-01	55	6435.56580E-02	1627
55	8424.31550E-01	55	9511.56930E-01	56	63.16660E 00	56	64.27320E 00	1628
56	123.23260E 00	56	138.94480E-01	56	143.28100E 00	56	144.11900E 00	1629
56	193.37770E-03	56	197.30500E-03	56	361.16790E-01	56	362.14100E-01	1630
56	363.95640E-02	56	364.13320E 00	56	370.40880E-02	56	393.13150E-02	1631
56	403.15230E-02	56	404.24830E-02	56	473.12660E-03	56	480.11160E-02	1632
56	481.35200E-03	56	482.92000E-03	56	483.39690E-03	56	484.13400E-02	1633
56	512.24430E-02	56	540.19410E 00	56	1307.79630E-02	56	1314.22010E-02	1634
56	1401.13980E-01	56	1494.32840E-02	56	5473.85670E-04	56	6402.39520E-02	1635
56	6435.10680E 00	56	6471.22610E 00	56	8424.21640E-01	56	9511.89040E-02	1636
57	121.70480E-03	57	138.13130E-02	57	143.90280E-02	57	6465.78900E-02	1637
58	60.47610E-01	58	122.54170E 00	58	124.87140E 00	58	151.20820E 00	1638
58	152.40250E 00	58	203.27000E-04	58	204.13430E-03	58	207.35500E-04	1639
58	208.85200E-03	58	534.17970E-01	58	535.26900E-01	58	536.13170E-01	1640
58	1442.80810E-01	58	1443.49070E-01	58	1444.29280E 00	58	1445.14920E 00	1641
58	1446.13080E-01	58	1447.82190E-02	58	1448.34920E-01	58	1452.83910E-01	1642
58	1453.69630E-02	58	1454.29280E 00	58	1455.29280E 00	58	1456.13320E-01	1643
58	1457.13250E-01	58	1458.86820E-01	58	1459.86440E-01	58	2408.10380E-01	1644
58	2427.35180E-02	58	2428.79120E-02	58	2457.29280E-02	58	5408.34460E-03	1645
58	5439.13970E-03	58	5440.16760E-03	58	6409.30240E-02	58	6429.60220E-02	1646
58	8428.65940E-00	58	9409.45850E-01	58	9429.97120E-01	58	9449.44430E-02	1647
58	9450.18290E-01	58	9451.59020E-01	58	9495.77730E-01	59	122.19990E 00	1648
59	124.17120E 00	59	151.21780E 00	59	152.61340E-01	59	204.27200E-03	1649
59	534.54500E-01	59	535.11040E-01	59	1452.66690E-02	59	1453.81420E-02	1650
59	6409.20280E-02	59	6429.13880E-01	59	9429.38810E-01	59	9495.45890E-01	1651
60	122.76990E-01	60	124.26040E 00	60	151.85720E-01	60	152.52840E-01	1652
60	203.56800E-05	60	204.37600E-03	60	534.12915E+00	60	535.38400E-01	1653
60	536.23810E-01	60	1442.99840E-02	60	1443.71130E-02	60	1452.62340E-02	1654
60	1458.14730E-01	60	6409.19030E-01	60	6429.42650E-01	60	8428.14820E-00	1655
60	9409.14080E 00	60	9429.15330E 00	61	63.34140E 00	61	64.29300E-01	1656
61	121.68170E 00	61	122.12250E 01	61	123.99470E 00	61	124.58830E 00	1657
61	202.11960E-03	61	203.12900E-03	61	206.76000E-03	61	207.81600E 01	1658
61	362.67280E-02	61	423.20130E-03	61	473.25120E-03	61	481.25530E-03	1659
61	483.26560E-03	61	536.31620E-02	61	1300.38090E 00	61	1301.20240E-02	1660
61	1302.39130E-02	61	1303.26740E-02	61	1313.96720E-03	61	1314.10540E-01	1661
61	1315.33960E-01	61	1316.25300E-02	61	1318.11060E-01	61	1319.30400E-01	1662
61	1320.25450E-02	61	1321.82130E-03	61	1441.65210E-02	61	1442.14950E-01	1663

1	2	3	4	5	6	7	8	
123456789	0123456789	0123456789	0123456789	0123456789	0123456789	0123456789	0	
61 1443.57050E-01	61 1445.15070E 00	61 1447.73490E-02	61 1449.17080E-01					1664
61 1453.45320E-02	61 2406.41700E 00	61 2407.20780E 00	61 2408.14540E 00					1665
61 2424.30700E-02	61 2425.24480E-01	61 2426.12460E-01	61 2427.28160E-01					1666
61 2428.77140E-02	61 2454.64160E-02	61 2455.30630E-02	61 2456.80720E-02					1667
61 2457.43440E-02	61 3407.10490E 00	61 3426.21310E-01	61 3453.10160E-02					1668
61 3455.59850E-02	61 5407.23440E-01	61 5408.84390E-03	61 5438.66080E-03					1669
61 5439.43940E-03	61 5440.38880E-03	61 5453.88910E-04	61 5455.25110E-03					1670
61 5456.20570E-03	61 5457.18850E-03	61 5473.29340E-03	61 8424.24950E-01					1671
61 8428.16920E-00	61 9447.14310E-01	61 9448.83430E-01	61 9449.11420E 00					1672
61 9450.90730E-01	61 9451.45970E-01	62 202.57900E-03	62 203.62100E-03					1673
62 6413.49740E 00	62 6429.86020E-02	62 6471.63690E-02	62 9413.10420E 01					1674
62 9414.10840E 01	62 9415.99760E 00	63 64.12070E 00	63 121.48800E 00					1675
63 123.80010E 00	63 143.26500E 00	63 144.26420E 00	63 201.13430E-03					1676
63 202.14600E-04	63 205.85200E 01	63 206.92400E-04	63 361.44270E-02					1677
63 362.34590E-01	63 363.36330E-02	63 364.44590E-02	63 365.74060E-02					1678
63 370.80930E-02	63 393.39000E-02	63 401.52540E-03	63 403.31910E-02					1679
63 404.22510E-01	63 405.38870E-02	63 423.49720E-03	63 472.29890E-01					1680
63 473.11320E-02	63 480.26690E-03	63 481.18910E-02	63 482.92000E-03					1681
63 483.21660E-02	63 511.31690E-01	63 512.15550E-02	63 540.48100E-01					1682
63 562.66760E-02	63 1304.45640E-02	63 1306.66740E-01	63 1307.15660E-01					1683
63 1311.19180E-03	63 1312.18760E-03	63 1314.12270E-01	63 1315.33330E-01					1684
63 1316.28970E-02	63 1318.83850E-03	63 1401.12820E-01	63 1494.52440E-02					1685
63 2406.54240E-01	63 2424.26940E-02	63 2425.57700E-02	63 2452.38820E-02					1686
63 2473.16860E-01	63 3453.69460E-03	63 5473.73730E-03	63 6402.31380E-02					1687
63 8424.18500E-00	63 9447.12330E-01	63 9448.21370E-01	63 9449.47710E-02					1688
63 9511.10740E-01	64 121.27780E 00	64 123.27000E 00	64 138.53580E-01					1689
64 143.31360E 00	64 144.13770E 00	64 201.64750E-03	64 202.70300E-04					1690
64 361.72000E-02	64 362.18020E-01	64 363.67850E-02	64 364.80540E-02					1691
64 365.25420E-01	64 370.24460E-01	64 393.12900E-01	64 401.14300E-02					1692
64 402.21570E-01	64 403.17490E-01	64 404.28750E-01	64 405.62770E-02					1693
64 423.17010E-02	64 472.14310E-01	64 473.81210E-03	64 480.24690E-03					1694
64 481.12320E-02	64 482.92000E-03	64 483.22470E-02	64 484.13400E-02					1695
64 511.58270E-01	64 512.10260E-01	64 540.49610E-01	64 562.43720E-01					1696
64 1307.99520E-02	64 1314.81380E-02	64 1401.20970E-01	64 1494.50080E-02					1697
64 2406.17050E-01	64 2424.72160E-03	64 2473.16240E-01	64 5473.54790E-03					1698
64 6402.14980E-01	64 6435.11610E-01	64 6471.24790E-01	64 8424.12240E-00					1699
64 9447.51710E-02	64 9511.44330E-01	70 196.80500E-04	70 200.10840E-04					1700
70 430.44920E-02	70 431.51390E-02	70 441.23890E-01	70 442.14500E-01					1701
70 458.25680E-01	70 459.20650E-01	70 495.62730E-01	70 514.45070E-02					1702
70 515.28810E-02	70 516.75090E-02	70 616.77910E-02	70 4495.13200E 00					1703
72 77.13400E-02	72 193.46440E-05	72 194.10840E-04	72 462.57160E-03					1704
72 463.74730E-02	72 464.43150E-03	72 475.59150E-03	72 510.99750E-02					1705
72 513.22530E-02	72 4510.34400E-01	73 75.21540E-02	73 76.16110E-01					1706
73 194.58820E-03	73 195.63160E-03	73 198.62850E-03	73 199.67650E-03					1707
73 402.76410E-03	73 410.58760E 00	73 411.73630E 00	73 412.62440E 00					1708
73 423.33550E-03	73 431.11590E-01	73 432.55520E 00	73 433.62060E 00					1709
73 434.57120E 00	73 435.23500E-01	73 442.10170E-01	73 443.43220E 00					1710
73 444.48780E 00	73 445.44810E 00	73 446.19560E-01	73 459.18320E-01					1711
73 460.59020E 00	73 461.67150E 00	73 462.64130E 00	73 463.25570E-01					1712
73 475.42800E-04	73 511.13200E-02	73 512.13370E-02	73 513.24850E-03					1713
73 4402.27110E-01	73 4409.40910E-01	73 4413.32120E 00	73 4429.45590E-02					1714
73 4435.18380E-01	73 4474.28670E 00	73 4511.79930E-02	75 76.10770E-02					1715

1	2	3	4	5	6	7	8	
75	198.13930E-04	75	402.20840E-02	75	412.51650E-02	75	423.44670E-03	1716
75	434.21440E-02	75	435.48260E-02	75	511.81840E-02	75	512.19590E-02	1717
75	4485.13970E-02	75	4511.20740E-01	76	77.42530E-02	76	193.12380E-04	1718
76	194.43340E-04	76	197.10840E-04	76	198.41800E-04	76	402.69030E-03	1719
76	412.25190E-02	76	423.21830E-03	76	434.20200E-01	76	435.70380E-01	1720
76	445.17210E-01	76	446.72320E-01	76	462.68360E-02	76	463.35180E-01	1721
76	511.21980E-02	76	512.11910E-02	76	4435.56770E-01	76	4511.51800E-02	1722
77	193.27860E-03	77	194.32510E-04	77	446.23990E-02	77	463.98140E-01	1723
77	464.60580E 00	77	475.19000E-03	77	510.20330E-02	77	513.12080E-02	1724
77	4435.15770E-02	77	4465.26020E-01	77	4471.12840E 00	77	4474.13030E 00	1725
77	4510.66780E-02	121	122.24860E 00	121	123.13060E 01	121	124.10290E 00	1726
121	138.25890E 01	121	143.64600E 00	121	144.47770E 00	121	362.11660E-01	1727
121	401.11650E-03	121	403.18460E-02	121	404.61830E-02	121	423.11660E-03	1728
121	465.16830E-01	121	466.17480E-03	121	467.37820E-04	121	468.13920E-03	1729
121	469.50450E-03	121	470.15950E-02	121	472.92560E-02	121	473.26950E-03	1730
121	474.64170E-01	121	480.79630E-04	121	481.44420E-03	121	483.74980E-03	1731
121	494.76950E-02	121	528.12510E 00	121	529.13040E 00	121	530.19280E 00	1732
121	532.92300E-01	121	566.26910E-03	121	1300.42350E-01	121	1303.14280E-03	1733
121	1305.20340E-01	121	1307.35540E-02	121	1308.65870E-04	121	1309.77190E-04	1734
121	1310.79220E-04	121	1313.19420E-03	121	1314.50210E-02	121	1317.23620E-01	1735
121	1318.20690E-02	121	1321.89690E-02	121	1401.72760E-02	121	1449.14540E-01	1736
121	1494.28960E-01	121	2406.64260E-01	121	2407.18150E-01	121	2424.38910E-02	1737
121	2425.15050E-01	121	2426.33420E-02	121	2452.57520E-01	121	2454.44200E-01	1738
121	2455.11190E-01	121	2473.28460E-01	121	2474.11560E 00	121	2476.36730E-01	1739
121	2477.91950E-02	121	3407.52770E-02	121	3426.22310E-02	121	3453.11280E-01	1740
121	3455.25740E-02	121	3477.22660E-02	121	5407.15290E-02	121	5438.19730E-03	1741
121	5453.14250E-02	121	5455.47760E-03	121	5473.19150E-03	121	5474.29370E-02	1742
121	5476.29430E-02	121	5477.18240E-03	121	6402.24650E-02	121	6435.44360E-02	1743
121	6465.45720E-02	121	6474.34400E 00	121	8424.91620E-01	121	8452.24010E+01	1744
121	8454.24130E-01	121	9447.51590E-02	121	9448.15070E-01	121	9449.55670E-02	1745
121	9474.61000E-01	121	9476.15070E 00	121	9510.26690E 00	122	124.13370E 01	1746
122	138.28170E 01	122	151.80660E 00	122	152.50030E 00	122	527.67700E 00	1747
122	530.17920E 00	122	531.21350E 00	122	537.91790E-01	122	538.28350E 00	1748
122	1300.54780E-01	122	1301.32770E-03	122	1302.20050E-03	122	1303.66790E-03	1749
122	1313.74130E-03	122	1318.75140E-03	122	1321.19660E-02	122	1440.65850E-01	1750
122	1441.65850E-01	122	1442.12560E-01	122	1443.12800E-01	122	1448.15600E-01	1751
122	1449.24260E-01	122	1450.60130E-01	122	1451.63300E-01	122	1452.12810E-01	1752
122	1453.16600E-01	122	1458.69320E-02	122	1459.14520E-01	122	2406.24210E-01	1753
122	2407.16070E-01	122	2408.23440E-01	122	2425.32870E-02	122	2426.22100E-02	1754
122	2427.12320E-01	122	2428.87850E-02	122	2454.23900E-02	122	2455.53250E-02	1755
122	2456.36290E-01	122	2457.35870E-01	122	2477.29850E-02	122	2478.23600E-01	1756
122	2479.39140E-01	122	3407.12460E-01	122	3426.66950E-02	122	3455.24480E-01	1757
122	3477.24270E-01	122	3478.94700E-02	122	5407.20790E-02	122	5408.18550E-03	1758
122	5438.25540E-03	122	5439.40510E-03	122	5440.41560E-03	122	5455.78370E-03	1759
122	5456.11940E-02	122	5457.11980E-02	122	5477.28480E-02	122	5479.27940E-02	1760
122	6409.59980E-02	122	6474.36720E 00	122	8428.13240E-00	122	8454.26730E+01	1761
122	8457.17720E+01	122	9449.68590E-02	122	9450.83320E-02	122	9451.88550E-02	1762
122	9477.19050E-01	122	9478.31750E 00	122	9479.67900E-01	122	9495.38110E 00	1763
123	124.25390E 00	123	138.27830E 01	123	143.36170E.00	123	144.11290E 01	1764
123	361.34890E-02	123	362.47910E-01	123	363.20050E-02	123	370.27800E-02	1765
123	393.15170E-02	123	401.29080E-03	123	403.25310E-02	123	404.91240E-02	1766
123	405.15250E-02	123	423.15440E-03	123	466.35380E-04	123	467.10760E-04	1767

```
        1         2         3         4         5         6         7         8
12345678901234567890123456789012345678901234567890123456789012345678901234567890

123  468.63720E-04 123  470.14840E-02 123  472.60770E-01 123  473.97610E-03  1768
123  480.36780E-03 123  481.23260E-02 123  483.22540E-02 123  494.19230E-02  1769
123  540.46260E-01 123  562.53950E-02 123 1300.14640E 00 123 1301.14420E-02  1770
123 1302.63300E-03 123 1303.40190E-03 123 1304.63480E-01 123 1305.37500E-01  1771
123 1306.24640E-02 123 1307.33350E-02 123 1308.67290E-03 123 1309.33530E-03  1772
123 1310.28000E-03 123 1311.25720E-03 123 1312.44450E-03 123 1313.13010E-02  1773
123 1314.66970E-02 123 1315.21060E-02 123 1316.58290E-01 123 1317.41550E-01  1774
123 1318.30200E-02 123 1319.80020E-03 123 1320.25200E-01 123 1321.16920E-01  1775
123 1322.84260E-03 123 1401.11370E-01 123 1449.21430E-01 123 1494.10760E-01  1776
123 2406.10580E 00 123 2407.52270E-01 123 2408.11950E-01 123 2424.12590E-01  1777
123 2425.51080E-01 123 2426.14140E-01 123 2427.45300E-02 123 2452.50430E-01  1778
123 2454.42150E-01 123 2455.10350E-01 123 2456.23950E-02 123 2473.50510E-01  1779
123 3407.16660E-01 123 3426.94200E-02 123 3453.11540E-01 123 3455.66260E-02  1780
123 5407.54690E-02 123 5408.73190E-04 123 5438.63550E-03 123 5439.63800E-04  1781
123 5453.13920E-02 123 5455.56830E-03 123 5473.60350E-03 123 6402.30000E-02  1782
123 8424.25350E-00 123 8452.76430E-00 123 9447.14460E-01 123 9448.43520E-01  1783
123 9449.19470E-01 123 9450.54540E-02 123 9511.64250E-02 124  138.29350E 01  1784
124  151.55810E 00 124  152.11510E 01 124  534.16330E-01 124  535.27500E-01  1785
124  536.80500E-01 124 1300.20490E 00 124 1301.13770E-02 124 1302.12930E-02  1786
124 1303.11520E-02 124 1313.19350E-02 124 1318.14780E-02 124 1321.17050E-02  1787
124 1440.20210E 00 124 1441.20400E 00 124 1442.19750E-01 124 1443.23760E-01  1788
124 1444.65810E-02 124 1446.15710E 00 124 1447.15510E 00 124 1448.88840E-01  1789
124 1449.19240E 00 124 1450.18330E 00 124 1451.19720E 00 124 1452.97150E-02  1790
124 1453.18800E-01 124 1454.65350E-02 124 1455.65410E-02 124 1456.15740E 00  1791
124 1457.15710E 00 124 1458.67360E-01 124 1459.66340E-01 124 2406.10230E 00  1792
124 2407.67130E-01 124 2408.15540E 00 124 2424.11620E-02 124 2425.16170E-01  1793
124 2426.14700E-01 124 2427.76030E-01 124 2428.55500E-01 124 2454.86150E-02  1794
124 2455.56120E-02 124 2456.44460E-01 124 2457.45590E-01 124 3407.83810E-01  1795
124 3426.39520E-01 124 3453.74400E-03 124 3455.26670E-01 124 5407.14350E-01  1796
124 5408.13550E-02 124 5438.11510E-02 124 5439.18910E-02 124 5440.19430E-02  1797
124 5453.61930E-04 124 5455.95540E-03 124 5456.15550E-02 124 5457.15610E-02  1798
124 6409.54040E-02 124 6429.43860E-02 124 8428.70930E-00 124 8457.24670E-00  1799
124 9409.42580E-01 124 9429.30320E-01 124 9447.19470E-02 124 9448.15520E-01  1800
124 9449.42370E-01 124 9450.57670E-01 124 9451.65300E-01 124 9495.18200E 00  1801
138  143.17320E 01 138  144.68840E 00 138  151.12880E 01 138  152.50060E 00  1802
138  361.22110E-02 138  363.31200E-02 138  465.22340E-02 138  466.11410E-03  1803
138  467.23560E-04 138  468.12370E-03 138  469.76910E-04 138  470.15210E-02  1804
138  473.23720E-03 138  494.38150E-02 138  527.91700E-01 138  528.20510E-01  1805
138  529.18660E-01 138  530.52000E 00 138  531.29600E-01 138  532.14560E-01  1806
138  537.90880E-02 138  538.32700E-01 138  540.24210E-01 138  566.28380E-03  1807
138 1300.24620E-01 138 1301.27290E-03 138 1307.46210E-02 138 1308.19570E-03  1808
138 1309.20980E-03 138 1310.41100E-03 138 1311.56000E-03 138 1312.54390E-03  1809
138 1316.49450E-02 138 1320.31260E-02 138 1322.58190E-03 138 1401.44700E-01  1810
138 1446.21380E-01 138 1447.21150E-01 138 1449.86830E-02 138 1456.20780E-01  1811
138 1457.21200E-01 138 1494.73090E-02 138 2474.77720E-02 138 2478.11180E-02  1812
138 5479.14560E-03 138 5465.20650E-01 138 6474.19760E 00 138 8428.71950E-01  1813
138 9478.58270E-01 138 9479.49940E-01 138 9495.11070E 00 138 9510.27260E-01  1814
143  144.87240E-01 143  361.17050E-01 143  362.13910E-01 143  363.93610E-02  1815
143  364.83030E-02 143  365.13610E-02 143  370.25090E-02 143  393.14630E-02  1816
143  401.40380E-03 143  402.56690E-02 143  403.39670E-02 143  404.11620E-01  1817
143  405.19370E-02 143  423.27320E-03 143  465.10100E-00 143  466.98500E-03  1818
143  467.26340E-03 143  468.12800E-02 143  469.10740E-02 143  470.16210E-02  1819
```

1	2	3	4	5	6	7	8	
123456789	0123456789	0123456789	0123456789	0123456789	0123456789	0123456789	0	
143	472.14560E-01	143	473.62180E-03	143	480.14620E-03	143	481.10230E-02	1820
143	482.92000E-03	143	483.10890E-02	143	484.13400E-02	143	494.39180E-01	1821
143	512.11810E-02	143	540.80630E-01	143	562.30990E-02	143	566.98160E-03	1822
143	1305.29230E-02	143	1307.10490E-01	143	1308.10630E-03	143	1309.25530E-03	1823
143	1310.41240E-03	143	1311.23740E-03	143	1312.10030E-03	143	1314.35140E-02	1824
143	1322.92300E-04	143	1401.41940E-02	143	1494.58730E-02	143	2473.10160E-01	1825
143	5473.20470E-03	143	6402.52720E-02	143	6435.11810E-01	143	6465.33710E-01	1826
143	6471.19150E-01	143	8424.91010E-01	143	8452.22760E-00	143	9447.22570E-02	1827
143	9511.65280E-02	144	361.59290E-02	144	362.12690E-01	144	363.15260E-02	1828
144	401.29270E-03	144	403.29340E-02	144	404.84390E-02	144	423.12050E-03	1829
144	465 .6931E-02	144	466.16260E-03	144	467.57940E-04	144	468.40900E-03	1830
144	469.22660E-03	144	470.16080E-02	144	472.20060E-01	144	473.45950E-03	1831
144	480.11330E-03	144	481.13150E-02	144	483.13400E-04	144	494.10500E-01	1832
144	540.26720E-01	144	566.17660E-03	144	1305.67010E-02	144	1307.31360E-02	1833
144	1308.21090E-02	144	1309.22720E-02	144	1310.26230E-02	144	1311.23190E-02	1834
144	1312.22910E-02	144	1314.13810E-02	144	1317.19200E-02	144	1322.24880E-02	1835
144	1494.36610E-02	144	2424.83130E-03	144	2452.96130E-02	144	2473.16280E-01	1836
144	3453.55880E-03	144	5453.81220E-04	144	5473.17560E-03	144	6402.17890E-02	1837
144	8424.11320E-00	144	8452.42230E-00	144	9447.21670E-02	144	9511.57130E-02	1838
151	534.16010E-01	151	535.64300E-02	151	1440.79140E-02	151	1441.65380E-02	1839
151	1442.10900E-01	151	1443.75250E-02	151	1448.13180E-01	151	1450.11360E-01	1840
151	1451.10750E-01	151	1452.22850E-01	151	1453.28610E-01	151	1458.14380E-01	1841
151	6409.73340E-02	151	6429.10060E-01	151	8428.20030E-00	151	8457.10790E-00	1842
151	9409.25540E-01	151	9429.25380E-01	151	9451.82270E-02	151	9495.39940E 00	1843
152	534.81900E-02	152	1303.16660E-03	152	1313.18340E-03	152	1440.10830E-01	1844
152	1441.82570E-02	152	1442.43910E-02	152	1448.88340E-02	152	1450.29880E-01	1845
152	1451.19730E-01	152	1452.12070E-01	152	1453.10680E-01	152	1458.11040E 00	1846
152	2428.48150E-02	152	2457.36780E-02	152	5439.86830E-04	152	5440.99950E-04	1847
152	5456.68720E-04	152	5457.76100E-04	152	6409.22780E-02	152	8428.26910E-00	1848
152	8457.12820E-00	152	9409.29010E-01	152	9450.45560E-02	152	9451.14720E-01	1849
152	9495.14270E 00	361	362.45690E-02	361	363.90220E-02	361	364.45690E-02	1850
361	365.90220E-02	361	375.90220E-02	361	376.90220E-02	361	377.23740E 00	1851
361	381.22840E-03	361	382.22840E-03	361	540.80270E-02	362	363.27420E-01	1852
362	363.16170E-02	362	364.91550E-02	362	365.27420E-01	362	375.30530E-01	1853
362	376.30530E-01	362	377.53330E 00	362	381.10530E-01	362	382.10530E-01	1854
362	473.15250E-03	362	480.23900E-03	362	481.86250E-03	362	483.13500E-04	1855
362	540.27500E-01	362	1020.24840E-01	362	1021.82660E-02	362	1314.15880E-02	1856
362	5473.11390E-03	362	8424.30600E-01	363	364.15680E-02	363	364.27420E-01	1857
363	375.20840E 00	363	381.44890E-02	363	382.44890E-02	363	540.17050E-01	1858
364	365.27420E-01	364	375.30530E-01	364	376.30530E-01	364	377.53330E 00	1859
364	381.10530E-01	364	382.10530E-01	364	480.25800E-03	364	482.92000E-03	1860
364	484.13400E-02	364	540.25720E-01	364	1020.24840E-01	364	1021.82660E-02	1861
364	6435.63060E-02	365	370.71320E-02	365	376.20840E 00	365	381.44890E-02	1862
365	382.44890E-02	365	393.82200E-03	365	9511.33980E-02	370	393.21120E-02	1863
370	9511.16290E-02	375	376.27240E-03	375	377.24830E 00	375	381.68440E-02	1864
375	382.68440E-02	375	1020.10360E-01	375	1021.34670E-02	376	377.24830E 00	1865
376	381.68440E-02	376	382.68440E-02	376	1020.10360E-01	376	1021.34670E-02	1866
377	1020.23740E 00	381	480.19110E-01	381	481.28090E-01	381	483.17780E-01	1867
381	1020.55560E-01	382	480.23550E-01	382	482.65700E-01	382	483.30160E-01	1868
382	484.55460E-01	382	1020.55560E-01	401	406.71420E-02	401	412.37580E-02	1869
401	413.78160E-02	401	416.62570E-02	401	511.72030E-03	401	543.36330E-02	1870
401	562.29890E-03	402	405.35950E-02	402	406.27580E-01	402	412.41240E-03	1871

1	2	3	4	5	6	7	8	
123456789	0123456789	0123456789	0123456789	0123456789	0123456789	0123456789	0	
402	412.54600E-01	402	413.45290E-01	402	416.44360E-01	402	423.41730E-03	1872
402	511.41300E-01	402	511.87380E-02	402	512.72870E-02	402	512.14700E-02	1873
402	543.33790E-01	402	562.46220E-01	402	4435.33320E-03	402	4511.10980E-01	1874
402	9511.12650E-01	403	406.10760E-01	403	412.52480E-02	403	413.11470E-01	1875
403	416.74740E-02	403	511.17740E-02	403	543.62730E-02	404	406.13580E-01	1876
404	412.38680E-02	404	413.13800E-01	404	416.12770E-01	404	511.11960E-01	1877
404	543.60360E-02	405	406.18350E-01	405	412.10960E-01	405	413.13480E-01	1878
405	416.20940E-01	405	511.53180E-01	405	543.88900E-02	406	411.36930E-01	1879
406	412.77720E-01	406	413.19680E 00	406	414.21410E-01	406	416.21460E 00	1880
406	417.20750E-01	406	543.19530E 00	406	2406.58060E 00	406	2425.22700E-01	1881
407	410.26130E-01	407	411.23980E 00	407	414.24530E 00	407	415.22260E-01	1882
407	416.21610E-01	407	417.24710E 00	407	418.22880E-01	407	533.12440E-01	1883
407	543.28110E-01	407	2407.25060E 00	407	2426.09340E-01	407	2427.23470E-03	1884
407	3407.38860E 00	407	3426.14270E-01	408	409.10200E-01	408	410.15040E 00	1885
408	411.41540E-01	408	414.22540E-01	408	415.18780E 00	408	417.22650E-01	1886
408	416.19380E 00	408	533.51950E-01	408	563.10610E 00	408	2408.61900E 00	1887
408	2427.22800E-01	408	3426.18270E-03	409	410.69470E-01	409	415.37010E-01	1888
409	418.38520E-01	409	517.12820E-01	409	518.10320E 00	409	563.15460E 00	1889
409	9409.83000E-00	410	411.11900E-01	410	412.12050E-01	410	415.14170E 00	1890
410	418.14580E 00	410	432.88970E-02	410	433.98850E-02	410	434.89750E-02	1891
410	443.68460E-02	410	444.77100E-02	410	445.70780E-02	410	460.92970E-02	1892
410	461.10560E-01	410	462.10090E-01	410	518.35910E-02	410	533.16080E 00	1893
410	563.79110E-01	410	4402.68050E-03	410	4409.30410E-01	410	4413.80070E-01	1894
411	412.12620E-01	411	414.23990E 00	411	415.22190E-01	411	416.21140E-01	1895
411	417.24170E 00	411	418.22810E-01	411	432.10930E-01	411	433.12230E-01	1896
411	434.11250E-01	411	443.85120E-02	411	444.96080E-02	411	445.88260E-02	1897
411	460.11620E-01	411	461.13220E-01	411	462.12630E-01	411	4402.72470E-03	1898
411	4409.11050E-02	411	4413.16770E-01	411	4474.57210E-02	412	413.77810E-01	1899
412	416.13180E 00	412	432.92690E-02	412	433.10490E-01	412	434.97410E-02	1900
412	435.70460E-03	412	443.72500E-02	412	444.81910E-02	412	445.75710E-02	1901
412	446.49440E-03	412	460.98670E-02	412	461.11220E-01	412	462.10740E-01	1902
412	512.56910E-03	412	543.42730E 00	412	4402.20780E-01	412	4409.96380E-03	1903
412	4413.80510E-01	412	4435.18440E-02	412	4474.54050E-02	412	4511.21060E-02	1904
413	416.16190E 00	413	417.29340E-01	413	543.36980E 00	413	9413.18525E+01	1905
414	416.48690E-01	414	417.34870E 00	414	418.51640E-01	414	533.84070E-02	1906
414	9414.19105E+01	415	417.50410E-01	415	418.26440E 00	415	517.58310E-02	1907
415	533.56550E-01	415	563.12340E 00	415	9415.17280E+01	416	485.91840E 00	1908
416	485.79100E 00	416	543.27940E 00	417	486.95740E 00	417	486.87500E 00	1909
417	533.84570E-02	417	543.21990E-01	418	487.86600E 00	418	487.84000E 00	1910
418	533.58130E-01	418	563.10960E 00	423	424.19280E-01	423	425.42290E-02	1911
423	434.46880E-04	423	434.55650E-02	423	435.15590E-03	423	435.19750E-01	1912
423	437.20010E-02	423	475.19360E-02	423	476.25810E-02	423	476.42490E-02	1913
423	483.18820E-01	423	483.71720E-02	423	484.18400E-01	423	485.31020E-02	1914
423	488.33940E-02	423	488.29880E-02	423	489.13110E-01	423	489.15230E-01	1915
423	489.14800E 00	423	511.63270E-03	423	511.86250E-03	423	512.36850E-03	1916
423	519.25840E-01	423	520.28820E-02	423	523.35400E-02	423	523.49070E-02	1917
423	576.23920E-02	423	576.23110E-02	423	2406.13520E-03	423	4413.70110E-04	1918
423	4435.98090E-04	423	4511.17470E-02	423	9511.17830E-03	424	425.35260E-02	1919
424	481.50760E-02	424	483.39940E-01	424	485.46450E-02	424	488.21680E-01	1920
424	489.24490E-01	424	520.23900E-02	424	523.16380E-01	424	576.66140E-02	1921
424	2424.62740E-01	424	2425.45060E-02	424	8424.29240E-01	425	437.19370E-01	1922
425	480.10230E-02	425	481.63090E-02	425	483.12110E-01	425	485.14540E 00	1923

1	2	3	4	5	6	7	8	
425	488.12350E-01	425	489.76060E-02	425	520.38380E-02	425	523.35140E 00	1924
425	576.91250E-01	425	577.19720E-01	425	2424.36620E-02	425	2425.39060E 00	1925
426	438.17050E-01	426	486.16180E 00	426	523.31620E-01	426	525.21150E-02	1926
426	570.28820E-02	426	576.13280E-01	426	578.33250E 00	426	579.81590E-01	1927
426	2426.16220E 00	426	2427.49930E-02	426	3426.24820E 00	427	429.24460E-01	1928
427	431.24830E-01	427	432.13590E 00	427	442.10760E-01	427	443.44730E-01	1929
427	487.19440E 00	427	526.41420E-01	427	572.11630E-02	427	574.76520E-01	1930
427	575.24230E-01	427	578.49650E-01	427	579.18960E-01	427	580.13900E-01	1931
427	2427.39620E 00	427	3426.37980E-02	428	429.13850E 00	428	430.14580E-01	1932
428	431.22120E-01	428	432.24770E-01	428	441.14400E-01	428	442.15430E-01	1933
428	443.86920E-02	428	487.18890E-01	428	557.54590E-01	428	558.77420E-01	1934
428	575.63660E-01	428	581.15140E-01	428	2428.20220E 00	428	8428.73570E-03	1935
429	430.31980E-01	429	431.13350E 00	429	432.22670E-01	429	439.18560E-01	1936
429	440.69100E-01	429	441.41590E-01	429	442.51200E-01	429	443.10400E-01	1937
429	458.56700E-02	429	478.12880E-01	429	479.23720E-01	429	526.10830E-01	1938
429	557.10010E 00	429	558.72540E-01	429	574.29030E-01	429	575.21040E 00	1939
429	581.70150E-02	429	9429.16640E+01	430	431.14740E-01	430	440.14340E-01	1940
430	441.33870E-02	430	442.10830E-01	430	495.60670E-01	430	514.51480E-03	1941
430	516.13320E-02	430	557.39390E-02	430	575.29650E-01	430	4495.56360E-01	1942
431	439.15940E-01	431	440.35160E-01	431	441.14660E-01	431	442.77100E-02	1943
431	442.18650E-01	431	459.25140E-01	431	487.17750E-01	431	515.78010E-03	1944
431	557.85730E-01	431	558.13590E-01	431	575.88460E-01	431	4429.70050E-01	1945
431	4474.52170E-02	431	4495.55350E-02	432	433.36630E-02	432	433.92120E-02	1946
432	434.84790E-02	432	439.70150E-01	432	440.15240E-01	432	443.67480E-02	1947
432	443.64290E-02	432	444.72420E-02	432	445.66530E-02	432	460.88230E-02	1948
432	461.10020E-01	432	462.95630E-02	432	486.55550E-02	432	487.96970E-02	1949
432	487.16280E 00	432	524.29600E-02	432	526.29100E 00	432	526.60420E-01	1950
432	526.34990E-01	432	574.65120E-01	432	575.20050E-01	432	578.27130E-01	1951
432	579.98320E-02	432	4409.28240E-02	432	4429.17410E-02	432	4474.63410E-02	1952
433	434.94780E-02	433	443.71740E-02	433	444.18190E-01	433	444.80970E-02	1953
433	445.74390E-02	433	460.98450E-02	433	461.11190E-01	433	462.10690E-01	1954
433	477.13800E-01	433	486.17170E 00	433	487.53950E-02	433	523.35080E-01	1955
433	524.27060E-01	433	526.32760E-01	433	576.16010E-01	433	578.29920E 00	1956
433	579.10110E 00	433	4402.56060E-03	433	4409.86400E-03	433	4413.95090E-02	1957
433	4474.69540E-02	434	435.35800E-02	434	435.16630E-02	434	443.66010E-02	1958
434	444.74510E-02	434	445.71250E-02	434	445.17490E-01	434	446.14920E-02	1959
434	460.90550E-02	434	461.10300E-01	434	462.99460E-02	434	476.13180E-01	1960
434	480.15290E-02	434	481.16420E-02	434	482.46740E-02	434	483.38560E-02	1961
434	484.10170E-01	434	485.16080E 00	434	488.13100E-01	434	489.39460E-02	1962
434	512.34070E-03	434	519.44000E-01	434	520.58810E-02	434	521.18630E-03	1963
434	522.54300E-03	434	523.26520E 00	434	525.20220E-02	434	576.95760E-01	1964
434	577.25780E-01	434	578.15460E-01	434	4402.11590E-02	434	4413.49930E-02	1965
434	4435.59120E-02	434	4474.60980E-02	434	4511.13900E-02	435	445.12960E-02	1966
435	446.44080E-02	435	462.83850E-03	435	463.19690E-02	435	481.91580E-03	1967
435	482.36360E-02	435	483.38000E-02	435	484.34660E-01	435	485.49860E-02	1968
435	488.21280E-01	435	489.81330E-02	435	511.99400E-03	435	512.84810E-03	1969
435	519.17670E-01	435	520.17120E-02	435	523.13650E-01	435	576.78690E-02	1970
435	577.33100E-02	435	4413.77280E-03	435	4435.26340E-01	435	4511.29300E-02	1971
436	447.49000E-02	436	476.29630E-02	436	480.26400E-02	436	481.33330E-01	1972
436	483.66090E-02	436	485.29880E-02	436	488.43200E-01	436	489.26790E-02	1973
436	520.44510E-02	436	521.23970E-03	436	523.74700E-02	436	559.34630E-02	1974
436	576.11670E-01	436	577.77420E-02	436	2424.57730E-01	436	2425.31650E-02	1975

1	2	3	4	5	6	7	8	
123456789	0123456789	0123456789	0123456789	0123456789	0123456789	0123456789	0123456789	0
436	3453.14560E-02	436	8424.15390E-01	436	9447.55200E-04	437	448.17270E-01	1976
437	454.15790E-01	437	476.20620E-01	437	480.18750E-02	437	481.79660E-02	1977
437	483.62920E-02	437	485.23330E-01	437	488.15840E-01	437	489.22150E-02	1978
437	520.21900E-02	437	523.94120E-01	437	576.23630E 00	437	577.95030E-01	1979
437	2424.28730E-02	437	2425.25990E 00	437	2454.08380E-01	437	9448.24260E-03	1980
438	449.18010E-01	438	477.13990E-01	438	486.25670E-01	438	523.12990E-01	1981
438	524.48700E-01	438	525.22410E-02	438	550.93540E-04	438	553.14520E-01	1982
438	555.69370E-02	438	570.63380E-02	438	576.19970E-01	438	577.13530E-01	1983
438	578.84670E-01	438	578.84670E-01	438	579.17840E 00	438	2426.10800E 00	1984
438	2427.34140E-02	438	2455.30000E-02	438	3426.16560E 00	438	3455.50340E-02	1985
438	9449.25310E-03	439	443.26790E-01	439	450.17550E-01	439	456.13280E-01	1986
439	478.13780E-01	439	487.60520E-01	439	526.24790E-01	439	571.65070E-01	1987
439	572.48410E-02	439	574.30120E-01	439	578.19820E-01	439	578.19820E-01	1988
439	579.33130E-01	439	580.10630E 00	439	581.11160E-01	439	2427.26380E 00	1989
439	2456.08520E-01	439	3426.25780E-02	439	9450.24660E-03	440	441.32150E-01	1990
440	442.29750E-01	440	443.52050E-02	440	451.16150E-01	440	457.13840E-01	1991
440	458.74840E-02	440	479.10850E-01	440	487.12720E-01	440	557.30390E-01	1992
440	558.38230E-01	440	573.67720E-01	440	575.36500E-01	440	581.14030E 00	1993
440	2428.24270E 00	440	2457.78420E-02	440	8428.18930E-03	440	9451.22690E-03	1994
441	442.14530E-01	441	442.15470E-01	441	457.61470E-02	441	458.47460E-02	1995
441	459.39500E-02	441	479.84610E-02	441	479.22270E-02	441	495.12640E 00	1996
441	514.63730E-02	441	515.19600E-02	441	516.32570E-02	441	539.20500E-01	1997
441	557.50110E-02	441	572.81450E-03	441	573.88410E-02	441	573.93290E-02	1998
442	516.22300E-03	442	539.10390E-01	442	557.35340E-01	442	571.66660E-02	1999
442	572.21970E-02	442	573.61680E-01	442	575.10030E 00	442	575.10400E 00	2000
441	575.36100E-01	441	575.37800E-01	441	581.13040E-01	441	581.82150E-02	2001
441	581.28200E-01	441	616.30170E-02	441	4495.11640E 00	442	459.33930E-01	2002
442	459.10290E-01	442	479.20890E-01	442	487.99160E-02	442	515.53670E-02	2003
442	581.43680E-01	442	616.28080E-03	442	4429.13680E-01	442	4474.82770E-02	2004
442	4495.33250E-02	443	444.56410E-02	443	445.51820E-02	443	460.69290E-02	2005
443	460.10120E-01	443	461.78560E-02	443	462.74940E-02	443	478.21860E-01	2006
443	574.70800E-01	443	574.77370E-01	443	575.59290E-02	443	578.10060E-01	2007
443	579.24040E-01	443	580.39540E-01	443	581.72380E-02	443	4409.72180E-03	2008
443	526.18100E 00	443	570.46040E-02	443	571.54070E-01	443	573.14560E-01	2009
443	487.35890E-01	443	524.18240E-01	443	526.15310E-01	443	526.25670E-01	2010
444	486.32660E-01	444	487.27090E-02	444	523.15560E-01	444	524.10040E 00	2011
444	461.19230E-01	444	461.88620E-02	444	462.84540E-02	444	477.25060E-01	2012
443	4413.49180E-02	443	4474.73110E-02	444	445.58490E-02	444	460.78010E-02	2013
445	460.71570E-02	445	461.81320E-02	445	462.19050E-01	445	462.78540E-02	2014
444	579.20870E 00	444	4413.58250E-02	444	4474.80560E-02	445	446.12360E-02	2015
444	526.18910E-01	444	576.21630E-01	444	577.16430E-01	444	578.97490E-01	2016
445	507.94650E-03	445	508.84630E-03	445	519.11890E-01	445	520.67570E-02	2017
445	483.21520E-02	445	484.50970E-02	445	485.24610E-01	445	488.16550E-01	2018
445	476.25660E-01	445	480.26700E-02	445	481.21260E-02	445	482.59930E-02	2019
445	559.58500E-02	445	576.19510E 00	445	577.97970E-01	445	4402.45200E-03	2020
446	482.28770E-01	446	484.48030E-02	446	488.41140E-01	446	507.16930E-02	2021
446	508.82100E-03	446	519.39720E-02	446	523.89210E-02	446	559.58500E-02	2022
446	463.20370E-02	446	476.35520E-02	446	480.44180E-02	446	481.27030E-02	2023
445	4413.51390E-02	445	4435.45240E-02	445	4474.69880E-02	446	462.76220E-03	2024
445	521.54170E-03	445	522.13650E-02	445	523.10190E 00	445	525.19450E-02	2025
446	576.12890E-01	446	577.93250E-02	446	4435.22440E-01	446	4474.74890E-03	2026
447	452.16040E-02	447	453.18850E-01	447	454.27770E-02	447	472.11500E-02	2027

1	2	3	4	5	6	7	8
123456789	0123456789	0123456789	0123456789	0123456789	0123456789	0123456789	0
447	474.56090E-02	447	475.80500E-02	447	476.63180E-02	447	503.13970E-02	2028
447	504.14530E-02	447	505.13390E-02	447	559.33300E-02	447	577.48830E-02	2029
447	2424.29920E-02	447	2425.13780E-03	447	3453.49000E-02	447	9447.14790E-01	2030
448	454.89850E-01	448	475.73440E-02	448	476.63050E-01	448	477.10530E-01	2031
448	577.57260E-01	448	2424.15600E-03	448	2425.15510E-01	448	2454.17270E-01	2032
448	9448.65240E-01	449	455.95810E-01	449	476.10380E-01	449	477.49260E-01	2033
449	524.30840E-01	449	525.28820E-03	449	550.36810E-03	449	552.27630E-01	2034
449	570.19150E-02	449	577.95800E-02	449	2426.64650E-02	449	2427.19840E-03	2035
449	2455.95000E-02	449	3426.95920E-02	449	3455.13370E-01	449	9449.68060E-01	2036
450	456.83930E-01	450	477.65740E-02	450	478.52950E-01	450	479.74820E-02	2037
450	524.55920E-02	450	551.27180E-02	450	571.49390E-01	450	572.16960E-02	2038
450	573.97330E-02	450	2427.15680E-01	450	2456.17550E-01	450	3426.15700E-03	2039
450	9450.66300E-01	451	457.82170E-01	451	458.21770E-01	451	478.85860E-02	2040
451	479.49410E-01	451	573.69380E-01	451	2428.14150E-01	451	2457.16150E-01	2041
451	9451.61010E-01	452	466.92980E-02	452	467.26150E-02	452	468.11140E-01	2042
452	469.11100E-01	452	470.12600E-01	452	471.11000E-02	452	472.13390E-01	2043
452	473.24920E 00	452	474.25170E 00	452	475.83300E-02	452	494.17980E-01	2044
452	503.60510E 00	452	504.23380E-02	452	505.53590E-02	452	507.10940E-02	2045
452	520.14970E-02	452	521.67770E-03	452	522.22110E-02	452	559.09770E-01	2046
452	2452.59630E 00	452	8452.22620E-02	453	454.50050E-02	453	471.24600E-02	2047
453	472.68200E-02	453	474.99450E-02	453	475.37510E-01	453	476.10150E-01	2048
453	480.27670E-02	453	488.18210E-01	453	503.64080E-02	453	504.78630E-02	2049
453	505.14380E-01	453	507.44130E-02	453	520.15730E-02	453	521.40920E-03	2050
453	522.14360E-02	453	559.19340E-01	453	576.82630E-02	453	577.29470E-01	2051
453	2454.55260E-02	453	3453.10210E 00	453	8454.16160E-03	454	472.11850E-02	2052
454	475.12310E-01	454	476.19200E 00	454	477.16190E-01	454	480.36160E-02	2053
454	481.61100E-02	454	488.14290E-01	454	504.56120E-02	454	505.10360E-01	2054
454	507.25880E-02	454	524.23820E-01	454	559.08740E-01	454	576.77620E-01	2055
454	577.33250E 00	454	2454.45510E 00	454	3453.45110E-02	454	8454.65190E-03	2056
455	476.14450E-01	455	477.19100E 00	455	524.19690E 00	455	525.18930E-02	2057
455	550.11740E-02	455	551.10760E-01	455	552.12870E 00	455	553.34380E-01	2058
455	555.18680E-01	455	570.18240E-02	455	576.15610E-01	455	577.51970E-01	2059
455	579.37580E-01	455	2455.18920E 00	455	2456.60640E-02	455	3455.28920E 00	2060
455	8454.67960E-03	456	478.17970E 00	456	479.11180E-01	456	524.31070E-01	2061
456	551.75730E-02	456	555.12480E-01	456	571.29190E 00	456	572.90510E-02	2062
456	573.54570E-01	456	579.18080E-01	456	580.47650E-01	456	581.11890E-01	2063
456	2456.46000E 00	456	3455.45930E-02	456	8454.61480E-03	457	458.72560E-01	2064
457	478.11990E-01	457	479.15560E 00	457	571.20140E-01	457	573.39140E 00	2065
457	580.45300E-02	457	581.63610E-01	457	2457.39100E 00	457	8457.96270E-03	2066
458	459.27910E-01	458	479.37250E-01	458	479.38930E-01	458	495.16380E 00	2067
458	514.99350E-03	458	515.23870E-03	458	516.45400E-03	458	539.15210E 00	2068
458	573.76660E-01	458	573.49190E-01	458	575.35000E-01	458	581.10330E-01	2069
458	616.22850E-02	458	4495.33460E 00	459	478.16530E-01	459	479.13570E 00	2070
459	515.12500E-02	459	516.30030E-03	459	539.15820E 00	459	570.20870E-02	2071
459	571.24240E-01	459	572.76200E-02	459	573.25290E 00	459	574.10810E-01	2072
459	575.10130E 00	459	580.66210E-02	459	581.68900E-01	459	616.49430E-03	2073
459	4429.95020E-02	459	4474.75550E-01	459	4495.17890E-01	460	461.12620E-01	2074
460	462.11860E-01	460	477.11480E-01	460	478.17610E 00	460	479.16360E-01	2075
460	524.63780E-01	460	570.14310E-01	460	571.24210E 00	460	573.56480E-01	2076
460	574.81040E-01	460	575.25150E-01	460	579.21900E-01	460	580.52000E-01	2077
460	581.13960E-01	460	4409.77320E-03	460	4413.55190E-02	460	4474.86560E-01	2078
461	462.13260E-01	461	477.17710E 00	461	478.13180E-01	461	486.17940E-01	2079

1	2	3	4	5	6	7	8	
461	487.17840E-02	461	524.39720E 00	461	526.10070E-01	461	571.17570E-01	2080
461	576.17090E-01	461	577.45590E-01	461	578.26230E-01	461	579.10290E 00	2081
461	580.48650E-02	461	4402.50310E-03	461	4409.75790E-03	461	4413.62160E-02	2082
461	4474.87500E-01	462	475.52560E-02	462	476.17390E 00	462	477.11610E-01	2083
462	480.28510E-02	462	481.19000E-02	462	482.54250E-02	462	483.11680E-02	2084
462	485.13180E-01	462	488.12830E-01	462	505.55210E-02	462	506.27350E-02	2085
462	507.16140E-02	462	508.98110E-03	462	520.48590E-02	462	521.14810E-02	2086
462	522.78300E-02	462	523.26050E-01	462	524.21620E-01	462	525.24910E-02	2087
462	559.18260E-01	462	576.98950E-01	462	577.37390E 00	462	4402.54030E-03	2088
462	4409.72260E-03	462	4413.59150E-02	462	4435.30500E-02	462	4474.75680E-01	2089
463	464.13100E-01	463	475.21310E-01	463	475.16820E-03	463	476.55840E-02	2090
463	480.11220E-01	463	481.93640E-03	463	482.40320E-02	463	488.18160E-01	2091
463	505.18120E-01	463	506.12460E-01	463	507.50400E-02	463	508.31640E-02	2092
463	510.13720E-02	463	513.10200E-02	463	559.62930E-01	463	576.61440E-02	2093
463	577.20180E-01	463	4435.54140E-02	463	4471.49250E-02	463	4474.55720E-02	2094
463	4510.67840E-02	464	465.31050E-01	464	471.22900E 00	464	474.26120E 00	2095
464	503.20210E 00	464	504.31580E-01	464	505.13490E-01	464	506.96410E-02	2096
464	506.12200E 00	464	507.18120E-02	464	508.12000E-02	464	508.16290E-02	2097
464	513.19610E-03	464	546.89600E-01	464	547.21560E-01	464	548.45460E-02	2098
464	559.28650E-01	464	4465.24440E-01	464	4471.12010E 00	464	4474.12190E 00	2099
465	471.10190E-01	465	474.60740E-01	465	503.46420E-01	465	504.35950E-02	2100
465	506.14880E-02	465	507.38600E-03	465	546.20920E-01	465	547.13210E-01	2101
465	548.57620E-01	465	9471.12440E-02	466	467.71800E 00	466	473.49480E-02	2102
466	474.48090E-02	466	503.53190E-02	466	9471.40110E-04	467	468.28400E 01	2103
467	472.11100E 00	467	473.96870E-03	467	474.13610E-02	467	503.30100E-01	2104
467	503.13740E-02	468	473.30930E-02	468	474.56470E-02	468	503.12410E-01	2105
469	473.58420E-02	469	474.33460E-02	469	503.12360E-01	469	1494.14650E-03	2106
470	473.90190E-02	470	474.93050E-02	470	503.19570E-01	470	1494.15590E-02	2107
471	474.31680E 00	471	474.57630E-02	471	475.37590E-02	471	476.11310E-02	2108
471	503.21300E 00	471	504.31820E-01	471	504.67630E-02	471	505.21890E-02	2109
471	506.75710E-02	471	507.66300E-02	471	507.52060E-02	471	508.93850E-02	2110
471	508.25100E-01	471	521.13220E-03	471	546.18390E 00	471	547.29230E-01	2111
471	548.19210E-01	471	559.29820E-01	471	559.18220E-01	471	9471.38700E-01	2112
472	473.22390E-03	472	473.75820E-02	472	474.26240E-02	472	475.11220E-02	2113
472	480.38090E-03	472	503.26940E 00	472	503.20150E-02	472	503.27300E 00	2114
472	540.32440E-01	472	8424.25590E-01	472	9471.22980E-01	473	474.15080E 00	2115
473	475.88590E-02	473	494.89550E-02	473	503.22020E 00	473	522.49150E-03	2116
473	2473.46220E 00	474	494.92690E-02	474	503.24480E 00	474	503.21060E 00	2117
474	504.30300E-01	474	504.15460E-01	474	505.92000E-02	474	505.16620E-01	2118
474	505.12490E-01	474	506.20330E-01	474	507.10340E-02	474	507.35660E-03	2119
474	508.75960E-03	474	522.11400E-02	474	546.41270E-01	474	547.80670E-01	2120
474	548.69670E-02	474	559.15840E-01	474	559.17150E-01			2121
474	2474.73310E 00	474	9474.46040E-01	475	480.11860E-02	475	481.38860E-02	2122
475	485.70140E-02	475	488.54890E-02	475	504.84340E-02	475	505.10500E-01	2123
475	505.27900E-01	475	505.17730E-01	475	506.25900E 00	475	506.16810E-01	2124
475	510.88290E-03	475	513.34830E-03	475	522.78740E-03	475	522.64650E-02	2125
475	559.24330E-01	475	559.25030E-01	475	576.44950E-02	475	577.12070E-01	2126
475	577.68770E-02	475	4510.32630E-02	476	480.28650E-02	476	481.16910E-02	2127
476	481.10500E-01	476	482.73890E-02	476	483.12170E-02	476	483.74130E-02	2128
476	484.55670E-02	476	485.28160E-01	476	485.30600E-01	476	486.14090E-01	2129
476	486.15540E-01	476	488.64310E-02	476	504.25470E-02	476	506.25190E-02	2130
476	520.30970E-02	476	520.17470E-02	476	521.90850E-03	476	522.45130E-02	2131

```
        1           2           3           4           5           6           7           8
123456789012345678901234567890123456789012345678901234567890123456789012345678901234567890
```

476	523.17060E-01	476	523.14110E-01	476	525.16150E-02	476	559.13910E-01		2132
476	559.49660E-02	476	576.26940E-01	476	576.33430E-01	476	577.20070E 00		2133
476	577.18060E 00	476	2476.23140E 00			476	9476.56060E-01		2134
477	485.13830E-01	477	485.11680E-01	477	486.20660E-01	477	486.34910E-01		2135
477	487.34600E-02	477	524.17870E 00	477	524.16180E 00	477	525.16230E-02		2136
477	526.12450E-01	477	550.77990E-03	477	551.52240E-02	477	552.71080E-01		2137
477	553.32160E-01	477	555.17270E-01	477	570.57440E-02	477	574.13590E-01		2138
477	577.23100E-01	477	577.18100E-01	477	578.14380E-01	477	579.15730E-01		2139
477	579.26610E-01	477	2477.66060E-01						2140
477	3477.17510E 00	477	9477.58420E-01	478	487.27350E-01	478	524.19000E-01		2141
478	524.28700E-01	478	551.81040E-02	478	555.81490E-02	478	570.54530E-02		2142
478	570.12480E-01	478	571.14260E 00	478	571.14530E 00	478	572.12570E-02		2143
478	572.59100E-02	478	573.22080E-01	478	573.27140E-01	478	574.87410E-01		2144
478	575.38560E-01	478	580.17440E-01	478	580.11930E-01	478	581.68910E-02		2145
478	2478.12980E 00					478	3478.08520E 00		2146
478	9478.26610E 00	479	487.11290E-01	479	539.13630E 00	479	558.79550E-02		2147
479	570.15280E-02	479	572.53420E-02	479	573.17050E 00	479	573.17330E 00		2148
479	574.20300E-01	479	575.11500E 00	479	581.14540E-01	479	581.19250E-01		2149
		479	2479.22330E 00	479	9479.14060E+01	480	485.21720E-02		2150
480	485.12260E-02	480	488.97620E-02	480	488.12300E-01	480	507.19950E-02		2151
480	520.13630E-02	480	521.58250E-03	480	523.18100E-02	480	540.30850E-03		2152
480	559.10400E-01	480	559.19000E-02	480	576.30680E-02	480	576.89420E-03		2153
480	577.33660E-02	480	577.14980E-02	480	9471.98420E-04	481	485.11610E-02		2154
481	485.69780E-02	481	488.38300E-01	481	488.10830E-01	481	520.77720E-02		2155
481	521.47580E-03	481	523.66600E-03	481	523.59470E-02	481	540.33620E-03		2156
481	559.12100E-02	481	576.73100E-02	481	576.75600E-03	481	577.77850E-03		2157
481	577.66390E-02	481	1020.17780E-01	482	485.52290E-02	482	488.27360E-01		2158
482	507.76640E-03	482	523.66550E-02	482	540.92000E-03	482	559.56360E-02		2159
482	576.83910E-02	482	577.77010E-02	483	484.12540E-02	483	485.89790E-02		2160
483	485.17920E-02	483	488.51000E-02	483	488.19590E-01	483	489.22540E-01		2161
483	489.12920E-01	483	519.90260E-02	483	520.68890E-02	483	520.50830E-02		2162
483	523.13210E-01	483	523.16450E-02	483	540.13400E-04	483	576.63830E-02		2163
483	1020.17780E-01	484	485.86890E-02	484	488.14330E-01	484	489.66340E-02		2164
484	519.21760E-01	484	520.17030E-02	484	523.10220E-01	484	525.25860E-03		2165
484	540.13300E-02	484	576.65870E-02	484	577.42030E-02	484	1020.22220E-01		2166
485	488.55360E-02	485	489.20550E-02	485	508.78230E-03	485	519.65510E-01		2167
485	520.30870E-02	485	520.18150E-02	485	521.19640E-03	485	522.76330E-03		2168
485	523.15190E 00	485	523.13940E 00	485	525.15060E-02	485	559.54450E-02		2169
485	576.24280E-01	485	576.31370E-01	485	577.16640E-01	485	577.11760E-01		2170
486	487.16100E-02	486	523.13690E-01	486	523.16420E-01	486	524.18910E-01		2171
486	525.11910E-02	486	526.29200E-01	486	570.26950E-02	486	578.16310E 00		2172
486	578.16870E 00	486	578.16310E 00	486	579.22810E-01	486	579.34960E-01		2173
487	524.20590E-02	487	526.23150E-01	487	526.66870E-01	487	572.12740E-02		2174
487	574.13550E 00	487	575.54410E-01	487	578.25650E-01	487	578.25650E-01		2175
487	578.17360E-01	487	579.36390E-02	487	580.57000E-02	488	508.26790E-02		2176
488	520.79300E 00	488	520.41960E-02	488	520.16520E-01	488	521.38650E-03		2177
488	559.12980E-01	489	519.22580E-01	489	520.42500E 00	489	520.92010E-02		2178
489	523.28090E-02	489	523.20620E-02	494	503.19570E-01	494	566.67920E-04		2179
494	1494.59550E-02	495	514.24680E-01	495	515.14580E-02	495	516.89440E-02		2180
495	616.79020E-02	495	4495.71830E 00	503	504.18110E-01	503	506.48130E-02		2181
503	508.93840E-03	503	546.80010E-01	503	547.18670E-01	503	548.58070E-02		2182
503	559.45350E-02	504	505.14470E-01	504	507.16130E-02	504	522.18920E-02		2183

1	2	3	4	5	6	7	8	20
504	559.36800E-01	505	506.12600E-01	505	506.13080E-01	505	506.12910E-01	2184
505	522.77430E-02	505	559.22070E-01	505	559.16450E-01	505	559.71720E-02	2185
506	559.13760E 00	506	559.09350E-01	506	559.15020E-01	506	577.29370E-02	2186
507	508.12000E-02	507	508.18820E-02	507	508.18530E-02	507	520.40310E-02	2187
507	520.62500E 00	507	521.29300E-01	507	521.69940E-03	507	559.11310E-01	2188
507	559.65050E-02	507	559.42310E-02	508	523.60290E-03	508	559.62780E-02	2189
508	559.14880E-01	508	559.69740E-02	508	576.10730E-02	508	577.12480E-02	2190
510	513.36640E-02	510	4510.67920E-01	510	9510.77030E-03	511	512.33740E-02	2191
511	562.82310E-02	511	4435.74710E-03	511	4511.47550E-01	511	9511.53650E-03	2192
512	562.47020E-02	512	4413.27840E-03	512	4435.59690E-03	512	4474.11160E-03	2193
512	4511.10240E-01	512	9511.27630E-02	513	4471.22230E-03	513	4510.14630E-01	2194
514	515.30420E-03	514	516.68570E-03	514	616.70000E-03	514	4495.11240E-01	2195
515	516.18110E-03	515	4429.72020E-03	515	4474.44470E-03	515	4495.33890E-02	2196
516	616.36670E-03	516	4495.19500E-01	517	563.11600E 00	519	520.63110E-02	2197
519	523.71630E-01	520	521.50580E-03	520	523.27050E-02	520	523.14680E-02	2198
520	559.41490E-02	520	576.30100E-02	520	577.20560E-02	521	559.62310E-03	2199
521	576.19440E-03	521	577.13000E-02	522	559.29580E-02	522	576.60420E-03	2200
522	577.80010E-02	522	577.65300E-01	523	525.47330E-03	523	576.18490E-01	2201
523	576.20340E-01	524	525.10400E 00	524	525.42200E-03	524	526.11480E-01	2202
524	550.34500E-03	524	551.58120E-02	524	552.31720E-01	524	553.50260E-01	2203
524	555.11920E 00	524	570.11570E-01	524	574.11540E-01	524	579.16090E-01	2204
524	579.21360E-01	525	576.37180E-03	525	577.65110E-03	525	578.46170E-03	2205
525	578.87500E-01	525	579.69000E-01	525	579.31890E-03	526	574.53590E-01	2206
526	575.69470E-02	526	578.66390E-01	526	578.72500E-01	526	579.47600E-01	2207
526	579.29950E-01	527	2479.54200E-02	527	9479.66700E 00	528	5474.11150E-03	2208
528	9474.11920E 00	528	9510.14920E-01	529	2476.11350E-02	529	5476.10760E-03	2209
529	9476.12050E 00	529	9510.14760E-01	530	532.14570E 00	530	2477.16560E-02	2210
530	9477.35720E 00	531	3477.14860E-02	531	9477.21110E 00	531	9478.30300E-01	2211
532	9476.10240E 00	534	535.42300E-01	534	9429.31695E+00	535	536.88700E-02	2212
535	9409.17000E-01	535	9429.55500E-01	536	9409.17710E-01	536	9429.45010E-01	2213
537	538.40360E-02	537	9478.61810E-01	538	3478.68430E-03	538	5479.12370E-03	2214
538	9478.22850E 00	538	9479.40110E-01	539	572.77810E-03	539	573.11880E 00	2215
539	575.67680E-01	539	581.12820E-01	540	6435.47140E-02	540	6471.91360E-02	2216
540	9471.11240E 00	546	547.79710E-01	546	548.57150E-01	546	549.12160E-01	2217
547	548.18380E-01	547	549.53910E-02	548	549.55180E-02	550	553.41100E-03	2218
550	577.12480E-03	550	579.12070E-03	551	552.66500E-01	551	570.45650E-02	2219
551	571.54470E-02	552	553.75090E-01	552	570.45220E-02	552	579.12010E-01	2220
553	555.64990E-01	553	570.40820E-02	555	570.10130E-01	557	558.91560E-01	2221
557	575.40620E-01	558	575.45070E-01	559	576.66980E-02	559	577.20120E-01	2222
562	9511.59030E-02	566	1494.54790E-04	566	9471.42050E-04	570	571.16030E-01	2223
570	571.15100E 00	570	574.12090E-01	570	575.19430E-02	570	579.28980E-02	2224
570	580.50300E-01	570	580.29270E-02	571	572.56460E-02	571	572.15600E 00	2225
571	574.68630E-01	571	575.14770E-01	571	580.78540E-02	571	580.68150E-02	2226
571	580.30800E 00	572	573.46830E-02	572	575.69140E-02	572	580.51200E-01	2227
572	580.87310E-03	572	5A1.89290E-03	573	574.15620E-01	573	575.11400E 00	2228
573	581.12350E-01	573	581.13390E-01	573	581.47100E 00	574	580.36200E 00	2229
574	580.67500E-01	575	581.10020E 00	575	581.50100E 00	576	577.20200E-01	2230
576	577.18350E-01	578	579.16850E-01	578	579.21330E-01	616	4474.25930E-03	2231
616	4495.18880E-01	1020	1021.55560E-01	1300	1301.16640E-02	1300	1302.10390E-02	2232
1300	1303.14910E-02	1300	1313.19030E-02	1300	2406.22240E-01	1300	2407.23260E-01	2233
1300	2426.29350E-02	1300	5407.23900E-02	1300	5438.14900E-03	1300	9448.55140E-02	2234
1300	9449.82360E-02	1302	2407.21070E-03	1303	2407.38690E-03	1314	2406.90960E-02	2235

```
        1         2         3         4         5         6         7         8
12345678901234567890123456789012345678901234567890123456789012345678901234567890

1318 2406.88410E-02 1318 2407.13980E-02 1318 2425.76100E-03 1318 9448.92270E-03  2236
1440 9451.45560E-02 1442 5408.15660E-02 1442 9409.61100E-02 1442 9429.74790E-02  2237
1443 2408.87810E-02 1443 5408.17090E-03 1443 9429.56200E-02 1448 1459.11710E 00  2238
1453 8428.59050E-01 1453 9409.83670E-02 1453 9429.54340E-02 1453 9495.69500E-02  2239
2406 2424.83420E-03 2406 2425.49830E-02 2406 9447.19150E-02 2406 9448.85830E-02  2240
2407 5407.40000E-01 2408 5408.15000E-01 2424 8424.43720E-02 2424 9447.23870E-02  2241
2425 9448.11110E-01 2426 5438.50000E-02 2426 9449.48880E-02 2427 5439.50000E-02  2242
2427 9450.93880E-02 2428 5440.50000E-02 2428 8428.73870E-02 2428 9451.94570E-02  2243
2452 5453.50000E-02 2452 8452.19450E-01 2454 8454.56050E-02 2454 9448.24260E-03  2244
2455 5455.50000E-02 2455 8454.22910E-02 2455 9449.98700E-04 2456 5456.50000E-02  2245
2456 8454.52850E-02 2456 9450.24660E-03 2457 5457.50000E-02 2457 8457.82760E-02  2246
2457 9451.22690E-03 2473 5473.50000E-02 2473 8452.18070E 00 2474 5474.50000E-02  2247
2476 5476.50000E-02 3426 9449.51040E-02 3453 8454.13900E-02 3453 9447.55200E-04  2248
3455 8454.35580E-02 3455 9449.15510E-03 3477 5477.50000E-02 3478 5479.50000E-02  2249
4402 4413.85450E-02 4402 4474.87690E-03 4402 6402.20070E-01 4409 4413.94750E-02  2250
4409 4474.12720E-02 4409 6409.29350E-01 4413 4435.30740E-02 4413 4474.20770E-01  2251
4413 6413.19350E-00 4429 4474.90790E-02 4429 4495.36870E-02 4429 6429.67080E-01  2252
4435 4474.40410E-02 4435 4511.12050E-02 4435 6435.51980E-01 4465 4471.79580E-02  2253
4465 4474.80210E-02 4465 6465.21370E-01 4471 4474.43350E-01 4471 6471.99820E-01  2254
4474 6474.36110E-00 4495 9495.54980E-00 4510 9510.71280E-01 4511 9511.49890E-01  2255
6409 6429.50490E-02 6413 9413.12770E-01 6413 9414.13290E-01 6435 6471.97810E-02  2256
9409 9429.79170E-01 9413 9414.27620E-01 9413 9415.25420E-01 9414 9415.26440E-01  2257
                    205 13060.2990E 00                      206 13190.2090E 00  2258
99999999999                                                                     2259
  121  1430.5300E 00  122  1510.5300E 00  122  1940.2800E 00  122  1950.2800E 00  2260
  123  1440.2190E 01  124  1520.2190E 01  124  2060.2800E 00  124  2070.2800E 00  2261
  143  1440.1520E 01  151  1520.1520E 01  193  1940.1480E 01  193  1970.3910E 01  2262
  194  1950.1480E 01  194  1980.3910E 01  194  5130.3380E-01  195  1960.1480E 01  2263
  195  1990.3910E 01  196  2000.3190E 01  196  5150.3030E-01  196  6160.3030E-01  2264
  197  1980.1460E 01  197  2010.3950E 01  198  1990.1460E 01  198  2020.3950E 01  2265
  198  5120.6080E-01  199  2000.1460E 01  199  2030.3950E 01  200  2040.3950E 01  2266
  200  5160.3030E-01  201  2020.1460E 01  201  2050.3910E 01  202  2030.1480E 01  2267
  202  2060.3910E 01  203  2040.1460E 01  203  2070.3910E 01  204  2080.3910E 01  2268
  205  2060.1480E 01                       206  2070.1460E 01                      2269
  207  2080.1480E 01  207 14450.1600E 00  208 14440.1600E 00  208 14540.1600E 00  2270
  361  3620.1080E 01  361  3630.2340E 00  361  3640.1080E 01  361  3650.2340E 00  2271
  362  3630.5350E 00  362  3650.5350E 00  362  3750.8280E 00  362  3760.8280E 00  2272
  362  3810.1200E 01  362  5400.4420E-01  362 10200.4770E 00  363  3640.5350E 00  2273
  363  3750.8150E 00  363  3810.1050E 00  363  3820.1160E 00  364  3650.5350E 00  2274
  364  3750.8260E 00  364  3760.8280E 00  364  3820.1110E 01  364  5400.4420E-01  2275
  364 10200.5160E 00  365  3700.9920E-01  365  3760.8150E 00  365  3810.1050E 00  2276
  365  3820.1160E 00  370  3930.5970E-01  375  3780.4800E 00  375 10200.1260E 00  2277
  376  3790.4800E 00  376 10200.1260E 00  380  3820.4800E 00  381  3820.2190E 00  2278
  381  4800.1330E 00  381  4840.1770E 00  381 10200.1070E 01  382  4800.3670E 00  2279
  382  4830.1250E 00  382 10200.9940E 00  402  4030.1320E 01  402  4050.9480E 00  2280
  402  4120.1480E 01  402  4130.6530E 00  402  4160.5350E 00  402  5110.9720E 00  2281
  402  5620.9940E 01  402  5620.6620E 00  403  4040.1020E 01  403  4130.9250E 00  2282
  403  5620.2700E 01  404  4050.9900E 00  404  4060.1340E 01  404  5620.6230E 00  2283
  405  4160.4380E 00  405  5110.2190E 02  405  5620.7230E 00  406  4070.8210E 00  2284
  406  4130.1470E 01  406  4160.1090E 01  406  4250.1030E 01  406  4850.8060E 00  2285
                      407  4080.8430E 00  407  4140.1760E 01  407  4170.1090E 01  2286
  407  4260.1050E 01  407  4860.8960E 00                                         2287
```

1	2	3	4	5	6	7	8	
408	4090.1410E 01	408	4150.1430E 01	408	4180.6890E 00	408	4270.7780E 00	2288
408	4870.7390E 00			409	4100.1220E 01	409	4150.1010E 01	2289
409	4180.1320E 01	409	4290.2670E 00	409	4870.1040E 01	409	5630.1310E 01	2290
410	4110.7360E 00	410	4150.1560E 01	410	4180.8810E 00	410	4320.9150E 00	2291
410	4870.8800E 00	411	4120.7980E 00	411	4140.1740E 01	411	4170.1220E 01	2292
411	4330.9660E 00	411	4860.9330E 00	412	4130.1500E 01	412	4160.1210E 01	2293
412	4340.9010E 00	412	4850.8620E 00	412	5330.1230E 00	412	5430.3200E 00	2294
413	4140.6180E 00	414	4150.6250E 00	416	4170.4880E 00	416	4250.1170E 01	2295
416	4340.9650E 00	416	4850.9120E 00	416	4850.9230E 00	416	5430.3040E 00	2296
417	4180.3100E 00	417	4260.1180E 01	417	4330.1020E 01	417	4860.9850E 00	2297
417	4860.1000E 01	418	4270.8760E 00	418	4290.2660E 00	418	4320.7830E 00	2298
418	4870.8320E 00	418	4870.7540E 00	418	4870.1030E 01	423	4240.1240E 01	2299
423	4350.9510E 00	423	4830.2000E 01	423	4840.1530E 01	423	4850.1400E 01	2300
423	5110.3330E 02	423	5230.1210E 00	424	4250.6540E 00	424	4360.1260E 01	2301
424	4830.2270E 01			425	4260.3920E 00	425	4370.2640E 01	2302
425	4850.1330E 01			426	4270.4070E 00	426	4380.2700E 01	2303
426	4860.1440E 01					427	4280.4400E 00	2304
427	4390.2290E 01	427	4870.1420E 01			428	4290.2890E 01	2305
428	4300.3610E 00	428	4400.3380E 01			429	4300.1230E 01	2306
429	4310.1900E 01	429	4870.3780E 00	429	5340.8780E 00	429	5350.1240E 00	2307
429	5360.1200E 00	429	5570.1950E 01	430	4310.3450E 00	430	4410.5040E 01	2308
430	4950.9710E 01	431	4320.3890E 00	431	4420.3820E 01	432	4330.6280E 00	2309
432	4430.2190E 01	432	4870.1180E 01	433	4340.6110E 00	433	4440.2920E 01	2310
433	4860.1130E 01	434	4350.7270E 00	434	4450.2510E 01	434	4850.1020E 01	2311
435	4460.1270E 01	435	4840.2180E 01	435	5400.2460E-01	436	4370.4200E 00	2312
436	4470.2120E 01	436	4810.1350E 01			437	4380.2630E 00	2313
437	4480.3920E 01			438	4390.2740E 00	438	4490.4010E 01	2314
				439	4400.2780E 00	439	4500.3410E 01	2315
		440	4410.4810E 00	440	4510.4560E 01			2316
441	4420.3970E 00	441	4580.3180E 01	441	4950.8820E 01	442	4430.3750E 00	2317
442	4590.2870E 01	442	5750.6080E 00	443	4440.3330E 00	443	4600.1980E 01	2318
443	5740.4660E 00	443	5750.3100E 00	444	4450.3230E 00	444	4610.2650E 01	2319
445	4460.5110E 00	445	4620.2270E 01	446	4630.1150E 01	446	4820.1850E 01	2320
446	5400.2440E-01	447	4480.2490E 00	447	4530.9930E 00	448	4490.1540E 00	2321
448	4540.8200E 01	449	4500.1600E 00	449	4550.3270E 01	450	4510.1620E 00	2322
450	4560.2790E 01	451	4570.3230E 01	451	4580.3120E 00	452	4530.8140E 00	2323
452	4700.7930E 00	452	4730.3210E 01	452	4740.2300E 01			2324
453	4540.8140E 00	453	4750.5960E 00			454	4550.5180E 00	2325
454	4760.1540E 01			455	4560.5380E 00	455	4770.2170E 01	2326
				456	4570.5470E 00	456	4780.1950E 01	2327
		457	4580.9080E 00	457	4790.1620E 01			2328
458	4590.6810E 00	458	4790.1320E 01	458	4950.2200E 02	459	4600.5080E 00	2329
459	4790.2130E 01	459	5390.2200E 00	460	4610.4380E 00	460	4780.2080E 01	2330
461	4620.4260E 00	461	4770.2550E 01	462	4630.6710E 00	462	4760.1660E 01	2331
463	4640.4960E 00	463	4750.8780E 00	463	4800.9380E 00	463	5400.1850E 00	2332
463	5590.4770E 00	464	4650.3980E 00	464	4710.1770E 01	464	4740.2820E 01	2333
464	5040.2900E-02	465	4660.4190E 01	465	4710.2950E 00	465	4740.5030E 00	2334
465	5400.5660E 00	465	5660.2000E 01	466	4690.8030E 00	468	4700.1330E 01	2335
468	4730.8850E 00	469	4700.1330E 01	469	4740.5880E 00	471	4720.4810E 01	2336
471	4800.5130E 00	471	5400.5400E 00	471	5460.5700E 00	472	4730.6120E 01	2337
472	4800.1180E 00	472	5030.1000E 01	473	4810.3350E 00			2338
474	4750.9400E 00	474	5030.9440E 00	474	5040.3300E-02	474	5280.1660E 00	2339

```
        1         2         3         4         5         6         7         8
12345678901234567890123456789012345678901234567890123456789012345678901234567890
  476  4770.9330E 00  476  5290.1770E 00  476  5770.5280E 00                      2340
                      475  4760.1320E 01  475  5100.1520E 02  475  5770.1680E 00 2341
  477  4780.1250E 01  477  5240.5410E 00  477  5300.1170E 00  477  5310.6350E-01 2342
  477  5550.1290E 00  477  5770.2840E 00                                         2343
  478  4790.8710E 00  478  5240.2940E 00  478  5310.6170E-01  478  5370.1200E 00 2344
  478  5380.1200E 00  478  5550.1350E 00  478  5710.3160E 00  478  5730.2780E 00 2345
                                           479  5270.1800E 00  479  5730.5120E 00 2346
                      480  4810.3870E 01  480  4820.3400E 01  480  5400.2310E 00 2347
  481  4820.2950E 01  481  4830.2870E 01  481  5400.2470E-01  482  4840.1910E 01 2348
  483  4840.5170E 01  483  5400.2470E-01  485  4860.8165E 00  485  5190.5530E 00 2349
  485  5230.6650E 00  486  4870.8400E 00  486  5230.3020E 00  486  5780.6650E 00 2350
  487  5780.3650E 00  495  5140.1690E 00  510  5130.3370E-01  511  5120.6650E-01 2351
  514  5150.1520E-01  514  5160.1520E-01  514  6160.1520E-01  517  5180.2610E 01 2352
  517  5630.1010E-01  518  5630.1010E-01  523  5760.4660E 00  524  5790.4100E 00 2353
  530  5320.3080E 01  546  5470.1030E 01  546  5480.2620E 01  546  5490.4450E-01 2354
  547  5480.8750E 00  547  5490.4510E-01  550  5510.2460E 01  550  5520.1360E-01 2355
  551  5520.1360E-01  552  5530.5720E 00  553  5550.2150E 01  557  5580.3090E 01 2356
  576  5770.4220E 00  576  5790.4530E 00 1440 14410.3570E 01 1440 14420.1990E 01 2357
 1440 14460.1990E 01 1440 14480.3650E 01 1441 14430.1990E 01 1441 14470.1990E 01 2358
 1441 14490.3650E 01 1442 14430.2310E 01 1442 14440.1990E 01 1442 14480.1870E 01 2359
 1443 14450.1990E 01 1443 14490.1870E 01 1444 14450.3570E 01 1444 14460.1990E 01 2360
 1444 14480.3650E 01 1445 14470.1990E 01 1445 14490.3650E 01 1446 14470.2310E 01 2361
 1446 14480.1870E 01 1447 14480.1870E 01 2406 24070.1100E 01 2407 54070.4200E-01 2362
 2408 34070.9600E 00 2408 54080.4200E-01 2424 24250.1580E 01 2425 24260.1310E 01 2363
 2426 54380.4200E-01 2427 34260.1190E 01 2427 54390.4200E-01 2428 54400.4200E-01 2364
 2452 54530.4200E-01 2454 24550.1040E 01 2454 34530.1200E 01 2455 54550.4200E-01 2365
 2456 34550.9440E 00 2456 54560.4200E-01 2457 54570.4200E-01 2473 54730.4200E-01 2366
 2474 54740.4200E-01 2476 24770.4710E 00 2476 54760.4200E-01 2478 34770.4710E 00 2367
 2479 34780.4710E 00 3477 54770.4200E-01 3478 54790.4200E-01                      2368
99999999999                                                                      2369
   61                                                                            2370
   0.0       0.025     0.050     0.075     0.100     0.125     0.150     0.175   2371
   0.200     0.225     0.250     0.275     0.300     0.325     0.350     0.375   2372
   0.400     0.425     0.450     0.475     0.500     0.525     0.550     0.575   2373
   0.600     0.625     0.650     0.675     0.700     0.725     0.750     0.775   2374
   0.800     0.825     0.850     0.875     0.900     0.925     0.950     0.975   2375
   1.000     1.025     1.050     1.075     1.100     1.125     1.150     1.175   2376
   1.200     1.225     1.250     1.275     1.300     1.325     1.350     1.375   2377
   1.400     1.425     1.450     1.475     1.500                                 2378
99999999999                                                                      2379
  536    1.0                                                                     2380
                                                                                 2381
                                                                                 2382
                                                                                 2383
                                                                                 2384
                                                                                 2385
                                                                                 2386
                                                                                 2387
                                                                                 2388
  527    1.0                                                                     2389
   9.890     9.890     9.890     9.890     9.890     9.890     9.890     9.890   2390
   9.890     9.890     9.890     9.890     9.890     9.890     9.890     9.890   2391
```

```
        1         2         3         4         5         6         7         8
12345678901234567890123456789012345678901234567890123456789012345678901234567890
```

9.890	9.890	9.890	9.890	9.890	9.890	9.890	9.890	2392
9.890	9.890	9.890	9.890	9.890	9.890	9.890	9.890	2393
9.890	9.890	9.890	9.890	9.890	9.890	9.890	9.890	2394
9.890	9.890	9.890	9.890	9.890	9.890	9.890	9.890	2395
9.890	9.890	9.890	9.890	9.890	9.890	9.890	9.890	2396
9.890	9.890	9.890	9.890	9.890				2397
531 1.0								2398
0.068	0.068	0.068	0.068	0.068	0.068	0.068	0.068	2399
0.068	0.068	0.068	0.068	0.068	0.068	0.068	0.068	2400
0.068	0.068	0.068	0.068	0.068	0.068	0.068	0.068	2401
0.068	0.068	0.068	0.068	0.068	0.068	0.068	0.068	2402
0.068	0.068	0.068	0.068	0.068	0.068	0.068	0.068	2403
0.068	0.068	0.068	0.068	0.068	0.068	0.068	0.068	2404
0.068	0.068	0.068	0.068	0.068	0.068	0.068	0.068	2405
0.068	0.068	0.068	0.068	0.068				2406
530 1.0								2407
3.410	3.410	3.410	3.410	3.410	3.410	3.410	3.410	2408
3.410	3.410	3.410	3.410	3.410	3.410	3.410	3.410	2409
3.410	3.410	3.410	3.410	3.410	3.410	3.410	3.410	2410
3.410	3.410	3.410	3.410	3.410	3.410	3.410	3.410	2411
3.410	3.410	3.410	3.410	3.410	3.410	3.410	3.410	2412
3.410	3.410	3.410	3.410	3.410	3.410	3.410	3.410	2413
3.410	3.410	3.410	3.410	3.410	3.410	3.410	3.410	2414
3.410	3.410	3.410	3.410	3.410				2415
529 1.0								2416
1.705	1.705	1.705	1.705	1.705	1.705	1.705	1.705	2417
1.705	1.705	1.705	1.705	1.705	1.705	1.705	1.705	2418
1.705	1.705	1.705	1.705	1.705	1.705	1.705	1.705	2419
1.705	1.705	1.705	1.705	1.705	1.705	1.705	1.705	2420
1.705	1.705	1.705	1.705	1.705	1.705	1.705	1.705	2421
1.705	1.705	1.705	1.705	1.705	1.705	1.705	1.705	2422
1.705	1.705	1.705	1.705	1.705	1.705	1.705	1.705	2423
1.705	1.705	1.705	1.705	1.705				2424
528 1.0								2425
1.023	1.023	1.023	1.023	1.023	1.023	1.023	1.023	2426
1.023	1.023	1.023	1.023	1.023	1.023	1.023	1.023	2427
1.023	1.023	1.023	1.023	1.023	1.023	1.023	1.023	2428
1.023	1.023	1.023	1.023	1.023	1.023	1.023	1.023	2429
1.023	1.023	1.023	1.023	1.023	1.023	1.023	1.023	2430
1.023	1.023	1.023	1.023	1.023	1.023	1.023	1.023	2431
1.023	1.023	1.023	1.023	1.023	1.023	1.023	1.023	2432
1.023	1.023	1.023	1.023	1.023				2433
535 1.0								2434
1.364	1.364	1.364	1.364	1.364	1.364	1.364	1.364	2435
1.364	1.364	1.364	1.364	1.364	1.364	1.364	1.364	2436
1.364	1.364	1.364	1.364	1.364	1.364	1.364	1.364	2437
1.364	1.364	1.364	1.364	1.364	1.364	1.364	1.364	2438
1.364	1.364	1.364	1.364	1.364	1.364	1.364	1.364	2439
1.364	1.364	1.364	1.364	1.364	1.364	1.364	1.364	2440
1.364	1.364	1.364	1.364	1.364	1.364	1.364	1.364	2441
1.364	1.364	1.364	1.364	1.364				2442
538 1.0								2443

```
         1         2         3         4         5         6         7         8
123456789 0123456789 0123456789 0123456789 0123456789 0123456789 0123456789 0123456789 0

  0.375     0.375     0.375     0.375     0.375     0.375     0.375     0.375
  0.375     0.375     0.375     0.375     0.375     0.375     0.375     0.375
  0.375     0.375     0.375     0.375     0.375     0.375     0.375     0.375
  0.375     0.375     0.375     0.375     0.375     0.375     0.375     0.375
  0.375     0.375     0.375     0.375     0.375     0.375     0.375     0.375
  0.375     0.375     0.375     0.375     0.375     0.375     0.375     0.375
  0.375     0.375     0.375     0.375     0.375     0.375     0.375     0.375
  0.375     0.375     0.375     0.375     0.375
537     1.0
  2.830     2.830     2.830     2.830     2.830     2.830     2.830     2.830
  2.830     2.830     2.830     2.830     2.830     2.830     2.830     2.830
  2.830     2.830     2.830     2.830     2.830     2.830     2.830     2.830
  2.830     2.830     2.830     2.830     2.830     2.830     2.830     2.830
  2.830     2.830     2.830     2.830     2.830     2.830     2.830     2.830
  2.830     2.830     2.830     2.830     2.830     2.830     2.830     2.830
  2.830     2.830     2.830     2.830     2.830     2.830     2.830     2.830
  2.830     2.830     2.830     2.830     2.830
533     1.0
  0.341     0.341     0.341     0.341     0.341     0.341     0.341     0.341
  0.341     0.341     0.341     0.341     0.341     0.341     0.341     0.341
  0.341     0.341     0.341     0.341     0.341     0.341     0.341     0.341
  0.341     0.341     0.341     0.341     0.341     0.341     0.341     0.341
  0.341     0.341     0.341     0.341     0.341     0.341     0.341     0.341
  0.341     0.341     0.341     0.341     0.341     0.341     0.341     0.341
  0.341     0.341     0.341     0.341     0.341     0.341     0.341     0.341
  0.341     0.341     0.341     0.341     0.341
543     1.0
 17.732    17.732    17.732    17.732    17.732    17.732    17.732    17.732
 17.732    17.732    17.732    17.732    17.732    17.732    17.732    17.732
 17.732    17.732    17.732    17.732    17.732    17.732    17.732    17.732
 17.732    17.732    17.732    17.732    17.732    17.732    17.732    17.732
 17.732    17.732    17.732    17.732    17.732    17.732    17.732    17.732
 17.732    17.732    17.732    17.732    17.732    17.732    17.732    17.732
 17.732    17.732    17.732    17.732    17.732    17.732    17.732    17.732
 17.732    17.732    17.732    17.732    17.732
562     1.0

566     1.0
```

```
         1         2         3         4         5         6         7         8
123456789012345678901234567890123456789012345678901234567890123456789012345678900

                                                                                2496
  558    1.0                                                                    2497
                                                                                2498
                                                                                2499
                                                                                2500
                                                                                2501
                                                                                2502
                                                                                2503
                                                                                2504
                                                                                2505
  552    1.0                                                                    2506
                                                                                2507
                                                                                2508
                                                                                2509
                                                                                2510
                                                                                2511
                                                                                2512
                                                                                2513
                                                                                2514
  550    1.0                                                                    2515
                                                                                2516
                                                                                2517
                                                                                2518
                                                                                2519
                                                                                2520
                                                                                2521
                                                                                2522
                                                                                2523
  559  1.0                                                                      2524
                                                                                2525
                                                                                2526
                                                                                2527
                                                                                2528
                                                                                2529
                                                                                2530
                                                                                2531
                                                                                2532
  401    1.0                                                                    2533
                                                                                2534
                                                                                2535
                                                                                2536
                                                                                2537
                                                                                2538
                                                                                2539
                                                                                2540
                                                                                2541
  402    1.0                                                                    2542
                                                                                2543
                                                                                2544
                                                                                2545
                                                                                2546
                                                                                2547
```

```
         1         2         3         4         5         6         7         8
123456789012345678901234567890123456789012345678901234567890123456789012345678901234567890
                                                                                    2548
                                                                                    2549
                                                                                    2550
  403    1.0                                                                        2551
                                                                                    2552
                                                                                    2553
                                                                                    2554
                                                                                    2555
                                                                                    2556
                                                                                    2557
                                                                                    2558
                                                                                    2559
  404    1.0                                                                        2560
                                                                                    2561
                                                                                    2562
                                                                                    2563
                                                                                    2564
                                                                                    2565
                                                                                    2566
                                                                                    2567
                                                                                    2568
  405    1.0                                                                        2569
                                                                                    2570
                                                                                    2571
                                                                                    2572
                                                                                    2573
                                                                                    2574
                                                                                    2575
                                                                                    2576
                                                                                    2577
  466    1.0                                                                        2578
                                                                                    2579
                                                                                    2580
                                                                                    2581
                                                                                    2582
                                                                                    2583
                                                                                    2584
                                                                                    2585
                                                                                    2586
  467    1.0                                                                        2587
                                                                                    2588
                                                                                    2589
                                                                                    2590
                                                                                    2591
                                                                                    2592
                                                                                    2593
                                                                                    2594
                                                                                    2595
  468    1.0                                                                        2596
                                                                                    2597
                                                                                    2598
                                                                                    2599
```

```
        1         2         3         4         5         6         7         8
12345678901234567890123456789012345678901234567890123456789012345678901234567890
                                                                              2600
                                                                              2601
                                                                              2602
                                                                              2603
                                                                              2604
    469   1.0                                                                 2605
                                                                              2606
                                                                              2607
                                                                              2608
                                                                              2609
                                                                              2610
                                                                              2611
                                                                              2612
4                                                                             2613
    470   1.0                                                                 2614
                                                                              2615
                                                                              2616
                                                                              2617
                                                                              2618
                                                                              2619
                                                                              2620
                                                                              2621
                                                                              2622
                                                                              2623
    5407  1.0
      0.4433  0.4433  0.4433  0.4433  0.4433  0.4433  0.4433  0.4433          2624
      0.4433  0.4433  0.4433  0.4433  0.4433  0.4433  0.4433  0.4433          2625
      0.4433  0.4433  0.4433  0.4433  0.4433  0.4433  0.4433  0.4433          2626
      0.4433  0.4433  0.4433  0.4433  0.4433  0.4433  0.4433  0.4433          2627
      0.4433  0.4433  0.4433  0.4433  0.4433  0.4433  0.4433  0.4433          2628
      0.4433  0.4433  0.4433  0.4433  0.4433  0.4433  0.4433  0.4433          2629
      0.4433  0.4433  0.4433  0.4433  0.4433  0.4433  0.4433  0.4433          2630
      0.4433  0.4433  0.4433  0.4433  0.4433                                  2631
    5408  1.0                                                                 2632
      0.4433  0.4433  0.4433  0.4433  0.4433  0.4433  0.4433  0.4433          2633
      0.4433  0.4433  0.4433  0.4433  0.4433  0.4433  0.4433  0.4433          2634
      0.4433  0.4433  0.4433  0.4433  0.4433  0.4433  0.4433  0.4433          2635
      0.4433  0.4433  0.4433  0.4433  0.4433  0.4433  0.4433  0.4433          2636
N     0.4433  0.4433  0.4433  0.4433  0.4433  0.4433  0.4433  0.4433          2637
      0.4433  0.4433  0.4433  0.4433  0.4433  0.4433  0.4433  0.4433          2638
      0.4433  0.4433  0.4433  0.4433  0.4433  0.4433  0.4433  0.4433          2639
      0.4433  0.4433  0.4433  0.4433  0.4433                                  2640
    5438  1.0                                                                 2641
      0.4433  0.4433  0.4433  0.4433  0.4433  0.4433  0.4433  0.4433          2642
      0.4433  0.4433  0.4433  0.4433  0.4433  0.4433  0.4433  0.4433          2643
      0.4433  0.4433  0.4433  0.4433  0.4433  0.4433  0.4433  0.4433          2644
      0.4433  0.4433  0.4433  0.4433  0.4433  0.4433  0.4433  0.4433          2645
      0.4433  0.4433  0.4433  0.4433  0.4433  0.4433  0.4433  0.4433          2646
      0.4433  0.4433  0.4433  0.4433  0.4433  0.4433  0.4433  0.4433          2647
      0.4433  0.4433  0.4433  0.4433  0.4433  0.4433  0.4433  0.4433          2648
      0.4433  0.4433  0.4433  0.4433  0.4433                                  2649
    5439  1.0                                                                 2650
      0.4433  0.4433  0.4433  0.4433  0.4433  0.4433  0.4433  0.4433          2651
```

```
         1         2         3         4         5         6         7         8
123456789 0123456789 0123456789 0123456789 0123456789 0123456789 0123456789 0
   0.4433    0.4433    0.4433    0.4433    0.4433    0.4433    0.4433    0.4433
   0.4433    0.4433    0.4433    0.4433    0.4433    0.4433    0.4433    0.4433
   0.4433    0.4433    0.4433    0.4433    0.4433    0.4433    0.4433    0.4433
   0.4433    0.4433    0.4433    0.4433    0.4433    0.4433    0.4433    0.4433
   0.4433    0.4433    0.4433    0.4433    0.4433    0.4433    0.4433    0.4433
   0.4433    0.4433    0.4433    0.4433    0.4433    0.4433    0.4433    0.4433
   0.4433    0.4433    0.4433    0.4433    0.4433
5440    1.0
   0.4433    0.4433    0.4433    0.4433    0.4433    0.4433    0.4433    0.4433
   0.4433    0.4433    0.4433    0.4433    0.4433    0.4433    0.4433    0.4433
   0.4433    0.4433    0.4433    0.4433    0.4433    0.4433    0.4433    0.4433
   0.4433    0.4433    0.4433    0.4433    0.4433    0.4433    0.4433    0.4433
   0.4433    0.4433    0.4433    0.4433    0.4433    0.4433    0.4433    0.4433
   0.4433    0.4433    0.4433    0.4433    0.4433    0.4433    0.4433    0.4433
   0.4433    0.4433    0.4433    0.4433    0.4433    0.4433    0.4433    0.4433
   0.4433    0.4433    0.4433    0.4433    0.4433
5453    1.0
   0.4433    0.4433    0.4433    0.4433    0.4433    0.4433    0.4433    0.4433
   0.4433    0.4433    0.4433    0.4433    0.4433    0.4433    0.4433    0.4433
   0.4433    0.4433    0.4433    0.4433    0.4433    0.4433    0.4433    0.4433
   0.4433    0.4433    0.4433    0.4433    0.4433    0.4433    0.4433    0.4433
   0.4433    0.4433    0.4433    0.4433    0.4433    0.4433    0.4433    0.4433
   0.4433    0.4433    0.4433    0.4433    0.4433    0.4433    0.4433    0.4433
   0.4433    0.4433    0.4433    0.4433    0.4433    0.4433    0.4433    0.4433
   0.4433    0.4433    0.4433    0.4433    0.4433
5455    1.0
   0.4433    0.4433    0.4433    0.4433    0.4433    0.4433    0.4433    0.4433
   0.4433    0.4433    0.4433    0.4433    0.4433    0.4433    0.4433    0.4433
   0.4433    0.4433    0.4433    0.4433    0.4433    0.4433    0.4433    0.4433
   0.4433    0.4433    0.4433    0.4433    0.4433    0.4433    0.4433    0.4433
   0.4433    0.4433    0.4433    0.4433    0.4433    0.4433    0.4433    0.4433
   0.4433    0.4433    0.4433    0.4433    0.4433    0.4433    0.4433    0.4433
   0.4433    0.4433    0.4433    0.4433    0.4433    0.4433    0.4433    0.4433
   0.4433    0.4433    0.4433    0.4433    0.4433
5456    1.0
   0.4433    0.4433    0.4433    0.4433    0.4433    0.4433    0.4433    0.4433
   0.4433    0.4433    0.4433    0.4433    0.4433    0.4433    0.4433    0.4433
   0.4433    0.4433    0.4433    0.4433    0.4433    0.4433    0.4433    0.4433
   0.4433    0.4433    0.4433    0.4433    0.4433    0.4433    0.4433    0.4433
   0.4433    0.4433    0.4433    0.4433    0.4433    0.4433    0.4433    0.4433
   0.4433    0.4433    0.4433    0.4433    0.4433    0.4433    0.4433    0.4433
   0.4433    0.4433    0.4433    0.4433    0.4433    0.4433    0.4433    0.4433
   0.4433    0.4433    0.4433    0.4433    0.4433
5457    1.0
   0.4433    0.4433    0.4433    0.4433    0.4433    0.4433    0.4433    0.4433
   0.4433    0.4433    0.4433    0.4433    0.4433    0.4433    0.4433    0.4433
   0.4433    0.4433    0.4433    0.4433    0.4433    0.4433    0.4433    0.4433
   0.4433    0.4433    0.4433    0.4433    0.4433    0.4433    0.4433    0.4433
   0.4433    0.4433    0.4433    0.4433    0.4433    0.4433    0.4433    0.4433
   0.4433    0.4433    0.4433    0.4433    0.4433    0.4433    0.4433    0.4433
   0.4433    0.4433    0.4433    0.4433    0.4433    0.4433    0.4433    0.4433
   0.4433    0.4433    0.4433    0.4433    0.4433
```

```
        1         2         3         4         5         6         7         8
12345678901234567890123456789012345678901234567890123456789012345678901234567890
```

```
5473    1.0
 0.4433    0.4433    0.4433    0.4433    0.4433    0.4433    0.4433    0.4433
 0.4433    0.4433    0.4433    0.4433    0.4433    0.4433    0.4433    0.4433
 0.4433    0.4433    0.4433    0.4433    0.4433    0.4433    0.4433    0.4433
 0.4433    0.4433    0.4433    0.4433    0.4433    0.4433    0.4433    0.4433
 0.4433    0.4433    0.4433    0.4433    0.4433    0.4433    0.4433    0.4433
 0.4433    0.4433    0.4433    0.4433    0.4433    0.4433    0.4433    0.4433
 0.4433    0.4433    0.4433    0.4433    0.4433    0.4433    0.4433    0.4433
 0.4433    0.4433    0.4433    0.4433    0.4433
5474    1.0
 0.4433    0.4433    0.4433    0.4433    0.4433    0.4433    0.4433    0.4433
 0.4433    0.4433    0.4433    0.4433    0.4433    0.4433    0.4433    0.4433
 0.4433    0.4433    0.4433    0.4433    0.4433    0.4433    0.4433    0.4433
 0.4433    0.4433    0.4433    0.4433    0.4433    0.4433    0.4433    0.4433
 0.4433    0.4433    0.4433    0.4433    0.4433    0.4433    0.4433    0.4433
 0.4433    0.4433    0.4433    0.4433    0.4433    0.4433    0.4433    0.4433
 0.4433    0.4433    0.4433    0.4433    0.4433    0.4433    0.4433    0.4433
 0.4433    0.4433    0.4433    0.4433    0.4433
5476    1.0
 0.4433    0.4433    0.4433    0.4433    0.4433    0.4433    0.4433    0.4433
 0.4433    0.4433    0.4433    0.4433    0.4433    0.4433    0.4433    0.4433
 0.4433    0.4433    0.4433    0.4433    0.4433    0.4433    0.4433    0.4433
 0.4433    0.4433    0.4433    0.4433    0.4433    0.4433    0.4433    0.4433
 0.4433    0.4433    0.4433    0.4433    0.4433    0.4433    0.4433    0.4433
 0.4433    0.4433    0.4433    0.4433    0.4433    0.4433    0.4433    0.4433
 0.4433    0.4433    0.4433    0.4433    0.4433    0.4433    0.4433    0.4433
 0.4433    0.4433    0.4433    0.4433    0.4433
5477    1.0
 0.4433    0.4433    0.4433    0.4433    0.4433    0.4433    0.4433    0.4433
 0.4433    0.4433    0.4433    0.4433    0.4433    0.4433    0.4433    0.4433
 0.4433    0.4433    0.4433    0.4433    0.4433    0.4433    0.4433    0.4433
 0.4433    0.4433    0.4433    0.4433    0.4433    0.4433    0.4433    0.4433
 0.4433    0.4433    0.4433    0.4433    0.4433    0.4433    0.4433    0.4433
 0.4433    0.4433    0.4433    0.4433    0.4433    0.4433    0.4433    0.4433
 0.4433    0.4433    0.4433    0.4433    0.4433    0.4433    0.4433    0.4433
 0.4433    0.4433    0.4433    0.4433    0.4433
5479    1.0
 0.4433    0.4433    0.4433    0.4433    0.4433    0.4433    0.4433    0.4433
 0.4433    0.4433    0.4433    0.4433    0.4433    0.4433    0.4433    0.4433
 0.4433    0.4433    0.4433    0.4433    0.4433    0.4433    0.4433    0.4433
 0.4433    0.4433    0.4433    0.4433    0.4433    0.4433    0.4433    0.4433
 0.4433    0.4433    0.4433    0.4433    0.4433    0.4433    0.4433    0.4433
 0.4433    0.4433    0.4433    0.4433    0.4433    0.4433    0.4433    0.4433
 0.4433    0.4433    0.4433    0.4433    0.4433    0.4433    0.4433    0.4433
 0.4433    0.4433    0.4433    0.4433    0.4433
99999999999999
1300
 61.65
1301
 61.647
1302
 61.647
```

```
        1         2         3         4         5         6         7         8
12345678901234567890123456789012345678901234567890123456789012345678901234567890
 1303                                                                          2756
  61.647                                                                       2757
 1304                                                                          2758
  61.647                                                                       2759
 1305                                                                          2760
  61.647                                                                       2761
 1306                                                                          2762
  61.647                                                                       2763
 1307                                                                          2764
  61.647                                                                       2765
 1313                                                                          2766
  61.647                                                                       2767
 1314                                                                          2768
  61.647                                                                       2769
 1315                                                                          2770
  61.647                                                                       2771
 1316                                                                          2772
  61.647                                                                       2773
 1317                                                                          2774
  61.647                                                                       2775
 1318                                                                          2776
  61.647                                                                       2777
 1319                                                                          2778
  61.647                                                                       2779
 1320                                                                          2780
  61.647                                                                       2781
 1321                                                                          2782
  61.647                                                                       2783
 9999999999999                                                                 2784
   49   68.500   50   58.746   51   68.960   52   51.264   53   69.963        2785
   54   52.937   55   58.537   56   59.036   57   56.294   58   91.418        2786
   59   60.307   60   67.154   61   64.086   62   70.655   63   63.594        2787
   64   58.189   70   67.833   72   65.536   73   69.982   75   68.864        2788
   76   69.219   77   68.144  121   49.719  122   50.056  123   49.580        2789
  124   49.692  138   52.780  143   56.310  144   56.310  151   54.250        2790
  152   54.250  193   66.310  194   66.310  195   66.310  196   66.310        2791
  197   66.310  198   66.310  199   66.310  200   66.310  201   66.310        2792
  202   66.310  203   66.310  204   66.310  205   66.310  206   66.310        2793
  207   66.310  208   66.310  361   64.979  362   65.057  363   65.117        2794
  364   65.200  365   64.996  370   62.457  375   65.188  376   65.149        2795
  377   65.246  378   65.190  379   65.151  380   66.188  381   65.867        2796
  382   66.189  393   61.284  401   70.870  402   70.802  403   70.847        2797
  404   70.472  405   70.169  406   70.845  407   70.090  408   70.012        2798
  409   70.092  410   70.125  411   70.402  412   71.802  413   71.766        2799
  414   70.438  415   70.186  416   71.458  417   70.333  418   70.072        2800
  423   70.012  424   69.652  425   70.468  426   70.247  427   70.120        2801
  428   69.910  429   69.715  430   69.041  431   69.434  432   69.935        2802
  433   70.149  434   70.488  435   69.661  436   69.518  437   70.127        2803
  438   70.192  439   70.064  440   69.913  441   68.998  442   69.316        2804
  443   69.751  444   69.992  445   70.080  446   69.436  447   69.597        2805
  448   70.000  449   70.133  450   69.950  451   69.809  452   69.769        2806
V 453   69.787  454   70.036  455   70.198  456   69.928  457   69.736        2807
```

1		2		3		4		5		6		7		8	
458	68.969	459	69.164	460	69.542	461	69.835	462	69.834						2808
463	69.394	464	68.969	465	68.067	466	68.334	467	68.982						2809
468	69.138	469	69.030	470	69.210	471	68.850	472	69.063						2810
473	69.558	474	69.443	475	69.497	476	69.758	477	69.776						2811
478	69.342	479	69.086	480	68.948	481	69.200	482	69.186						2812
483	69.451	484	69.442	485	70.791	486	70.270	487	70.056						2813
488	69.768	489	69.884	494	81.666	495	68.942	503	69.376						2814
504	69.526	505	69.870	506	69.850	507	69.850	508	69.891						2815
510	69.455	511	70.065	512	66.965	513	67.144	514	68.540						2816
515	67.591	516	67.325	517	70.095	518	70.094	519	70.574						2817
520	69.830	521	69.855	522	69.892	523	70.398	524	69.995						2818
525	70.076	526	69.956	527	64.745	528	62.060	529	63.326						2819
530	56.937	531	57.492	532	56.739	533	71.213	534	69.177						2820
535	72.263	536	65.855	537	69.927	538	57.776	539	69.167						2821
540	66.096	543	80.209	546	68.873	547	68.885	548	68.863						2822
549	68.853	550	90.165	551	88.873	552	72.637	553	71.348						2823
555	71.060	557	69.700	558	69.702	559	71.317	562	70.697						2824
563	70.091	566	68.085	570	70.111	571	69.721	572	69.691						2825
573	69.347	574	69.775	575	69.452	576	70.127	577	69.895						2826
578	70.158	579	70.078	580	69.784	581	69.443	616	67.327						2827
1020	65.728	1021	65.554	1300	68.880	1301	64.250	1302	64.250						2828
1303	64.250	1304	64.250	1305	64.250	1306	64.250	1307	64.250						2829
1308	61.550	1309	61.550	1310	61.550	1311	61.550	1312	61.550						2830
1313	64.250	1314	64.250	1315	64.250	1316	64.250	1317	64.250						2831
1318	64.250	1319	64.250	1320	64.250	1321	64.250	1322	61.550						2832
1401	55.797	1440	143.600	1441	143.600	1442	143.600	1443	143.600						2833
1444	143.600	1445	143.600	1446	143.600	1447	143.600	1448	143.600						2834
1449	143.600	1450	154.350	1451	154.350	1452	154.350	1453	154.350						2835
1454	154.350	1455	154.350	1456	154.350	1457	154.350	1458	154.350						2836
1459	154.350	1494	54.209	2406	63.899	2407	63.753	2408	68.843						2837
2424	69.480	2425	69.599	2426	69.760	2427	71.375	2428	74.475						2838
2452	72.848	2454	71.881	2455	72.058	2456	72.466	2457	74.111						2839
2473	74.774	2474	75.685	2476	75.055	2477	74.954	2478	75.905						2840
2479	79.290	3407	68.592	3426	71.301	3453	71.770	3455	72.308						2841
3477	75.928	3478	79.723	4402	68.123	4409	69.057	4413	70.163						2842
4429	68.677	4435	67.421	4465	65.454	4471	66.403	4474	65.797						2843
4495	66.309	4510	63.129	4511	67.209	5407	65.012	5408	78.115						2844
5438	77.690	5439	79.188	5440	81.902	5453	80.643	5455	79.584						2845
5456	79.832	5457	81.532	5473	82.820	5474	82.941	5476	82.408						2846
5477	83.239	5479	86.652	6402	60.329	6409	66.082	6413	70.476						2847
6429	67.702	6435	61.163	6465	57.427	6471	61.153	6474	54.685						2848
8424	57.231	8428	68.175	8452	52.107	8454	49.989	8457	50.562						2849
9409	70.273	9413	71.340	9414	70.521	9415	70.368	9429	70.455						2850
9447	60.509	9448	62.025	9449	62.787	9450	64.013	9451	69.116						2851
9471	67.113	9474	60.375	9476	57.683	9477	58.121	9478	58.666						2852
9479	66.694	9495	59.262	9510	53.336	9511	61.744								2853
9999999999															2854
888888															2855

END NOM DECK

NRL B THERMAL DISTORTION DAY 381 22 21 NORMAL SOLAR 2-20-74 RRA 2856

NRL B THERMAL DISTORTION DAY 381 22 21 NORMAL SOLAR 100 PERCENT SUN RRA 2857

1 2858

1300 2859

C-85

620-250 Vol. 1

```
123456789 1 123456789 2 123456789 3 123456789 4 123456789 5 123456789 6 123456789 7 123456789 8 0
```

```
1301
1302
1303
1304
1305
1306
1307
1313
1314
1315
1316
1317
1318
1319
1320
1321
99999
  61
  0.0       0.025     0.050     0.075     0.100     0.125     0.150     0.175
  0.200     0.225     0.250     0.275     0.300     0.325     0.350     0.375
  0.400     0.425     0.450     0.475     0.500     0.525     0.550     0.575
  0.600     0.625     0.650     0.675     0.700     0.725     0.750     0.775
  0.800     0.825     0.850     0.875     0.900     0.925     0.950     0.975
  1.000     1.025     1.050     1.075     1.100     1.125     1.150     1.175
  1.200     1.225     1.250     1.275     1.300     1.325     1.350     1.375
  1.400     1.425     1.450     1.475     1.500
  0
1401   0.0        1.5      9999.9    9999.9    9999.9    9999.9
1494   0.0        1.5000   9999.9    9999.9    9999.9    9999.9
1494   0.5416     1.5      9999.9    9999.9    9999.9    9999.9
1494   0.0        1.5000   9999.9    9999.9    9999.9    9999.9
9999999999
   6    1    7    7
 562   0.068
 401   6.930
 402   0.47
 403   0.47
 404   0.47
 405   0.47
 566   0.068
 536   3.410
 527   0.330
 531   5.047
 528   0.068
 535   0.341
 558  16.040
 532  20.478
 550   6.620
 466   0.05
 467   0.160
 468   0.11
 469   0.11
```

```
2860
2861
2862
2863
2864
2865
2866
2867
2868
2869
2870
2871
2872
2873
2874
2875
2876
2877
2878
2879
2880
2881
2882
2883
2884
2885
2886
2887
2888
2889
2890
2891
2892
2893
2894
2895
2896
2897
2898
2899
2900
2901
2902
2903
2904
2905
2906
2907
2908
2909
2910
2911
```

1		2		3		4		5		6		7		8	
123456789	0123456789	0123456789	0123456789	0123456789	0123456789	0123456789	0123456789	0123456789	0123456789	0123456789	0123456789	0123456789	0123456789	0	
470	0.22														2912
559	3.280														2913
99999															2914
2															2915
99999															2916
2															2917
49	70.882	50	61.771	51	69.167	52	58.684	53	72.005						2918
54	59.574	55	68.609	56	69.215	57	73.501	58	93.203						2919
59	63.524	60	69.701	61	66.558	62	72.265	63	66.827						2920
64	68.253	70	68.153	72	69.022	73	71.670	75	72.528						2921
76	72.501	77	71.335	121	56.951	122	57.087	123	56.951						2922
124	57.087	138	61.437	143	78.325	144	78.325	151	55.139						2923
152	55.139	193	67.376	194	67.376	195	67.376	196	67.376						2924
197	67.376	198	67.376	199	67.376	200	67.376	201	67.376						2925
202	67.376	203	67.376	204	67.376	205	67.376	206	67.376						2926
207	67.376	208	67.376	361	68.829	362	68.766	363	68.836						2927
364	68.925	365	68.756	370	68.034	375	68.618	376	68.592						2928
377	68.422	378	68.606	379	68.579	380	69.594	381	69.356						2929
382	69.646	393	67.609	401	211.090	402	74.028	403	74.134						2930
404	73.784	405	73.386	406	73.748	407	71.491	408	70.419						2931
409	70.524	410	70.774	411	71.869	412	74.518	413	74.803						2932
414	71.962	415	70.116	416	74.349	417	71.617	418	70.593						2933
423	73.209	424	72.616	425	72.920	426	71.151	427	70.516						2934
428	69.462	429	68.680	430	68.900	431	69.160	432	70.834						2935
433	71.443	434	72.147	435	72.762	436	72.183	437	71.983						2936
438	70.576	439	70.576	440	69.679	441	68.925	442	69.219						2937
443	71.077	444	71.077	445	72.805	446	72.614	447	71.946						2938
448	71.574	449	70.707	450	70.362	451	69.726	452	71.316						2939
453	71.625	454	71.257	455	70.846	456	70.124	457	69.722						2940
458	68.938	459	69.282	460	70.546	461	71.042	462	72.200						2941
463	72.848	464	71.797	465	71.868	466	71.856	467	71.878						2942
468	71.829	469	71.730	470	71.665	471	72.460	472	71.913						2943
473	71.737	474	71.596	475	72.014	476	71.874	477	70.809						2944
478	70.058	479	69.161	480	72.199	481	72.299	482	72.360						2945
483	72.565	484	72.583	485	74.133	486	71.372	487	70.607						2946
488	72.897	489	73.048	494	72.564	495	68.891	503	71.749						2947
504	72.922	505	73.473	506	73.826	507	73.191	508	74.758						2948
510	71.968	511	73.279	512	69.519	513	68.599	514	68.519						2949
515	67.558	516	67.490	517	70.390	518	70.391	519	73.779						2950
520	73.028	521	73.083	522	72.266	523	72.980	524	70.992						2951
525	71.107	526	70.895	527	68.779	528	66.033	529	67.473						2952
530	65.139	531	63.884	532	64.934	533	72.259	534	69.234						2953
535	73.166	536	67.832	537	73.558	538	62.556	539	69.210						2954
540	71.110	543	82.817	546	72.113	547	72.071	548	72.095						2955
549	71.987	550	96.133	551	94.255	552	74.106	553	72.577						2956
555	72.183	557	68.861	558	68.920	559	79.126	562	73.973						2957
563	70.483	566	71.896	570	70.954	571	70.413	572	70.307						2958
573	69.494	574	70.670	575	69.521	576	72.408	577	71.913						2959
578	71.117	579	71.030	580	70.546	581	69.510	616	67.499						2960
1020	69.065	1021	68.979	1300	61.650	1301	61.647	1302	61.647						2961
1303	61.647	1304	61.647	1305	61.647	1306	61.647	1307	61.647						2962
1308	98.320	1309	98.320	1310	98.320	1311	98.320	1312	98.320						2963

1	2	3	4	5	6	7	8
123456789	0123456789	0123456789	0123456789	0123456789	0123456789	0123456789	0
1313 61.647	1314 61.647	1315 61.647	1316 61.647	1317 61.647			2964
1318 61.647	1319 61.647	1320 61.647	1321 61.647	1322 98.320			2965
1401 -459.700	1440 143.600	1441 143.600	1442 143.600	1443 143.600			2966
1444 143.600	1445 143.600	1446 143.600	1447 143.600	1448 143.600			2967
1449 143.600	1450 151.723	1451 151.723	1452 151.723	1453 151.723			2968
1454 151.723	1455 151.723	1456 151.723	1457 151.723	1458 151.723			2969
1459 151.723	1494 -459.700	2406 68.088	2407 68.088	2408 68.522			2970
2424 70.957	2425 70.957	2426 70.957	2427 70.042	2428 75.578			2971
2452 70.709	2454 69.685	2455 69.685	2456 70.988	2457 74.090			2972
2473 72.508	2474 69.965	2476 69.276	2477 69.276	2478 68.290			2973
2479 76.493	3407 68.522	3426 70.042	3453 69.685	3455 70.988			2974
3477 68.290	3478 76.493	4402 71.862	4409 70.675	4413 71.913			2975
4429 69.309	4435 71.841	4465 71.161	4471 70.911	4474 68.666			2976
4495 67.117	4510 67.108	4511 71.868	5407 69.132	5408 78.089			2977
5438 79.002	5439 78.447	5440 83.401	5453 78.694	5455 77.726			2978
5456 79.087	5457 81.837	5473 80.842	5474 77.989	5476 77.300			2979
5477 76.753	5479 84.029	6402 69.416	6409 68.593	6413 72.176			2980
6429 69.707	6435 70.138	6465 71.243	6471 70.152	6474 60.862			2981
8424 66.688	8428 71.661	8452 61.381	8454 57.078	8457 56.956			2982
9409 71.309	9413 73.833	9414 72.079	9415 70.944	9429 70.374			2983
9447 66.033	9448 65.374	9449 65.602	9450 66.963	9451 71.810			2984
9471 71.520	9474 64.793	9476 63.592	9477 65.020	9478 63.322			2985
9479 68.404	9495 62.881	9510 59.843	9511 69.951				2986
99999							2987
PMD,F							2988
FIN							2989